CORTIZO / FAÇADES

INDEX

CORTIZO PRESENTATION 3

CORTIZO FAÇADES: TECHNICAL INFORMATION 13

01 / Base profiles: mullions & transoms 14

- » Mullions
- » Inertia comparisons
- » Wind loading graphs
- » Transoms

02 / Types of mechanical T joins for mullion-transom 24

- » Automatic anti-roll stops
- » Adjustable stop
- » Stop for polygonals
- » Heavy loads top
- » Stop / glazing support for heavy loads

03 / Types of structural frame fixings 27

- » Start & ending
- » Front of slab
- » Top slab surface

04 / Ventilation & drainages 29

05 / Weather tightness 31

06 / Thermal insulation 33

07 / Glazing 36

08 / Openings 39

09 / Structural elements 49

10 / Façade systems 50

11 / Skylight - Veranda 64

12 / Composite panel 66

PROJECTS 69

CORTIZO / FACADES

PRESENTATION

CORTIZO

ALWAYS IN THE FOREFRONT OF INNOVATION

Established in 1972 in the town of Padrón (A Coruña - Spain), CORTIZO finds itself currently as the **principal manufacturer and distributor of aluminium profiles for industry in Spain and European benchmark** with a profile production of 75,824 tonnes last year.

The company is present in 60 countries and is currently immersed in an ambitious international expansion. Last year CORTIZO reached a turnover of 554 million Euros.

The research, design and technological applications are situated at the centre of the expansion and growth strategy of CORTIZO.

In fact, the **R & D department** has designed to date, more than 50 exclusive systems of windows, doors, façades, composite panel and the latest generation of solar protection systems and has invested more than 72,000 hours per year in research.

- **CORTIZO Technology Centre**
- **Ad-Hoc Projects**
- **TSAC Network**
- **CORTIZO Lab**
- **CE Marking**

TURNOVER
554 million €

EMPLOYEES
3,086 PEOPLE

TOTAL SALES EVOLUTION (TONNES)

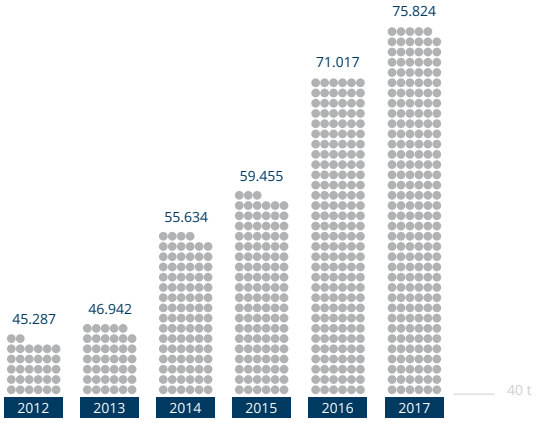

SALES DISTRIBUTION 2017

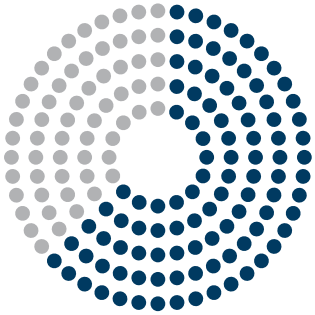

29% NATIONAL

71% INTERNATIONAL

- *32% Germany*
- *24% France*
- *11% Great Britain*
- *7% Portugal*
- *6% Slovakia & Czech Republic*
- *4% Poland*
- *16% Others*

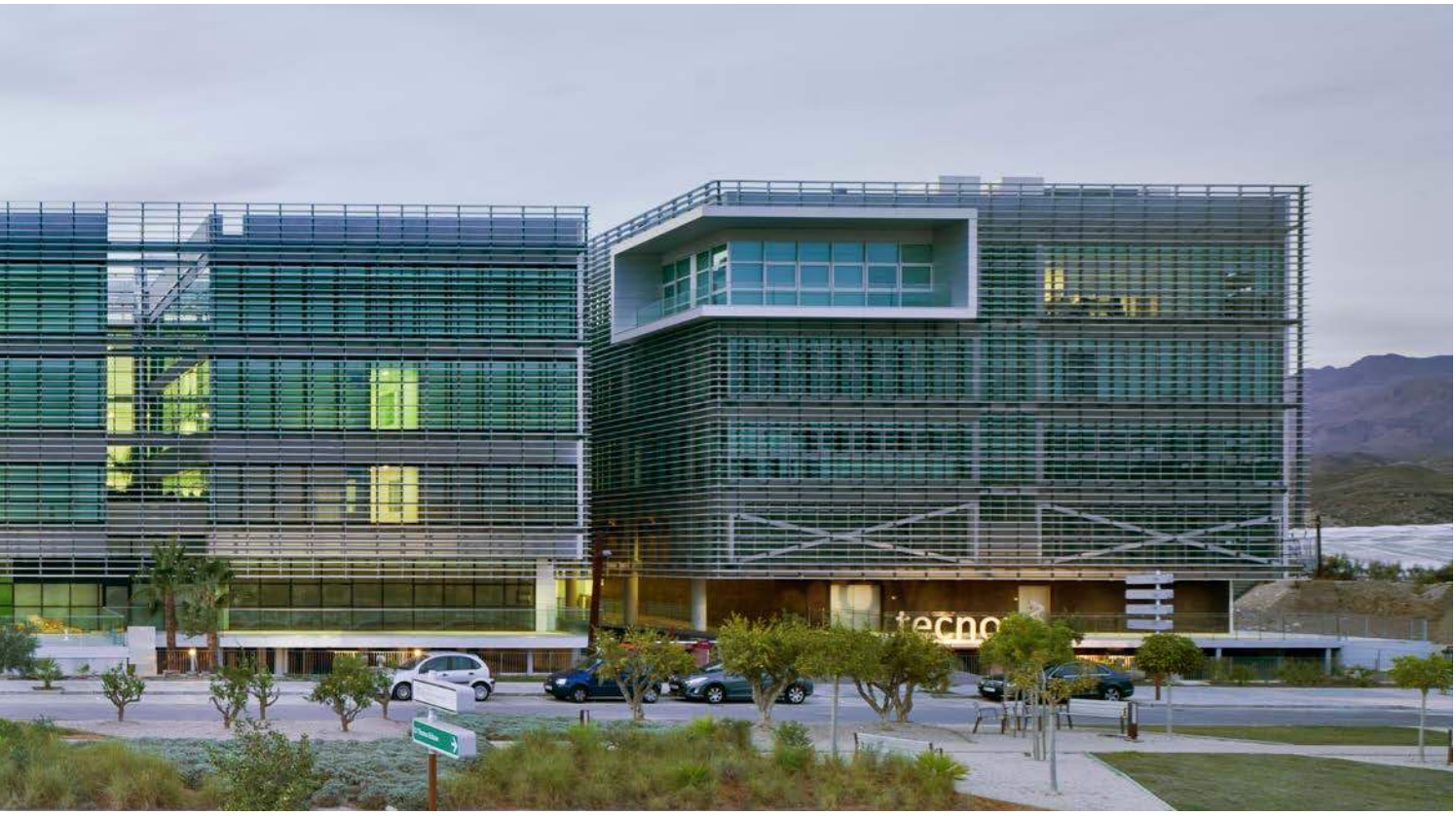

CORTIZO proximity

PRESCENCE IN 31 COUNTRIES

We do produce

OUR OWN MANUFACTURING OF ALL OF THE COMPONENTS

16	**Extrusion presses**	16	**Powder coating plants**	2	**Foundries**
6	**Anodising plants**	3	**Machining plants**	2	**Chemical brightening plant**
1	**Fitting factory**	1	**Joints factory**	1	**Composite panel factory**

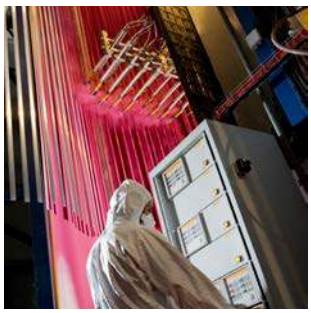

CORTIZO is characterized by completing internally the **integral aluminium production cycle**, and ensuring the accuracy of each procedure and the quality of methods and materials used throughout the complete process.

Smelting, extrusion, powder coating, anodising, chemical brightening and machining is carried out in its production centres in order to optimise all of its range of final products.

CORTIZO is committed to **its own manufacture of all the necessary components** for the manufacture of building finishes **(hardware, polyamides and weather tightness gaskets)**, as well as **composite panel**.

The **CORTIZO Integral Service** is completed with a pioneering logistical system based on two **intelligent warehouses for profiles** one of which is for mill finish material and the other for finished material, **with a capacity of 5,000 tonnes** of the more common references and consequently we are able to provide reduced delivery lead times to clients as well as maximising production levels.

Foundry

PRODUCTION CAPACITY: 43,000 t

CORTIZO counts on **more than 2,400 collection points**, between its clients and delegations throughout Europe for depositing aluminium profile offcuts. A fleet of trucks named **CORTIZO RECYCLING** are responsible for the uplift of the deposited aluminium and transfer it back to the production centres for processing.

FACILITIES

- Unlimited aluminium recyclability.
- 2 remelting plants: Asturias and Padrón (A Coruña).
- Production capacity: 43,000 t.
- Laboratory. Emission spectometer.
- Ø Billet diameters: 140, 153, 178, 203 & 254 mm.

ALLOYS

Extrusion of all alloys series:

- 1000 (Al)
- 6000 (Al+Mg+Si)
- 7000 (Al+Zn+Mg)

Alloys in stock:

- EN AW-1050
- EN AW-6005
- EN AW-6060
- EN AW-6063
- EN AW-6082
- EN AW-6106
- EN AW-6463

Extrusion

ANNUAL PRODUCTION CAPACITY: 120,000 t

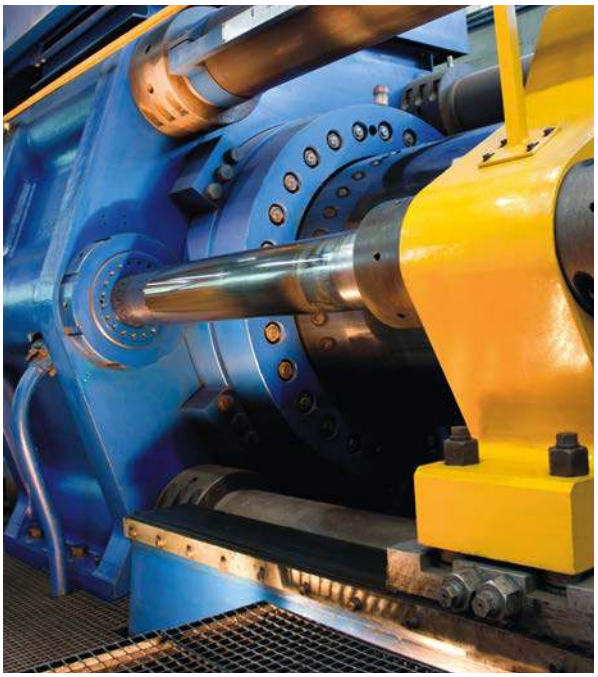

- **16 Extrusion presses.**
- **39,000 Dies.**
- **Quality certificates: ISO 9001 y DNV Marine.**
- **Extrusion according to European standards EN 755-9 and EN 12020.**
- **Heat treatment according to European standards EN 755-2:2009 T4 - T5 - T6 - T64 - T66.**

The extrusion process consists of introducing the metal in a recipient or container and fitting to one end a die that has the section design that we want to obtain. At the other end, pressure is applied by a piston that will push the metal thtextured the die hole and in turn the profile is produced.

- **Maximum length: 24 meters.**
- **Maximum weight: 35 kg/meter.**
- **Minimum weight: 80 gr/meter.**

Powder coating

16 POWDER COATING PLANTS

The powder coating process consists of covering the aluminium with a layer of organic coatings. The painting of aluminium with powder paint is made by way of electrostatic removal and its subsequent polymerisation in an oven at temperatures that reach up to 200ºC. This process converts it in to a highly resistant surface resistant to severe atmospheric conditions.

The powder coating of the profiles is another of the aluminium surface treatments that, as well as protecting it even more from natural corrosion, allows it to attain an **unlimited variety of colours**.

CORTIZO offers an extensive colour range that stretches from the **classical finishes (gloss or matt)** moving to **special coatings with textured textures, imitation of noble materials** such as timber (pine, oak, chestnut, teak, sapelly, cherry, walnut...) up to **anti-bacterial finishings** comprising of silver ions adhered to a completely inert and natural resin, that prevents the growth and migration of bacteria, virus, mold, fungus and septic matter.

The CORTIZO powder coating is guaranteed with the maximum European quality seals of approval such as **QUALICOAT, SEA-SIDE & QUALIDECO**, that recognise and guarantee the complete process.

FINISHES

- » RAL Chart
- » Antibacterial
- » Special
- » Textured
- » Metallic
- » Wood Effect
- » NCS Chart

QUALITY CERTIFICATES

- » Qualicoat
- » Seaside
- » Qualideco
- » Qualimarine

MAXIMUM PROFILE LENGTH

8 meters

Anodizing

6 ANODIZING PLANTS

- » **13 colours.**
- » **More than 110 finishes.**
- » **Quality certificate: Ewaa-Euras.**
- » **Maximum profile length: 8 meters.**

Anodising is the surface treatment that is capable of obtaining an aluminium oxide coating (Al203) on the base aluminium surface by way of an electrolyctic process consistent in producing the circulation of a continuous current thtextured an electrolyte with an acid base.

With this process, an artificial increase of up to 1000 times the thickness of the natural aluminium oxide coating is achieved, obtaining great **protection against corrosion and abrasion**. Its own characteristics of this material with regard to resistance and durability are increased considerably using this surface treatment, converting it in this way as an ideal material in coastal zones and subject to hard climatic conditions.

CORTIZO has available an extensive anodising colour range: **bordeaux, blue, green, ivory, black, grey, bronze, inox (stainless steel), champagne, gold, natural, copper and acier**, that once more demonstrates its innovative character. All these colours can at the same time be presented as different finishes after subjecting the profile to mechanical surface treatments, and therefore obtaining **matt-grain, textured brushed, bright, brushed, polished, re-polished or combinations of any of these finishes**.

All of which are guaranteed by the European **"EWAA-EURAS"** seal of approval, that reaches the most demanding European quality levels.

Class 10: 10-14 microns. For internal use only.
Class 15: 15-19 microns. Standard class. External use.
Class 20: 20-24 microns. For use in aggresive conditions, industrial areas and marine contamination.
Class 25: 25-29 microns. Maximum protection. For contaminated industrial atmospheres.

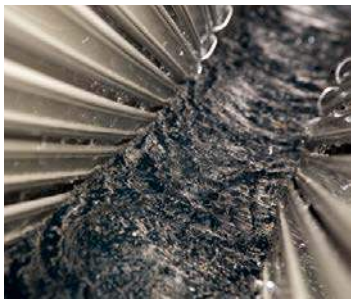

Technology centre

INNOVATION CORTIZO

The CORTIZO Technology Centre is dedicated exclusively to the **investigation, the development and innovation** in the aluminium sector devoting service to **more than 30 countries**. With a total surface area of 3,175 m², this Centre, a pioneer in Europe comprises of **8 test benches** in which the performance features of the more than 50 exclusive window, door, light façades and solar protection systems designed by CORTIZO are tested and certified.

After the entry into force of the Regulation (EU) Nº305/2011 regarding building products, which replace the European Directive 89/106/CEE, CORTIZO Technology Centre is a test laboratory that has the adequate and necessary equipment, as well as qualified personnel, to make tests and calculations, in accordance with the existing European laws on testing, to carry out the Specific Technical Documentation and the Initial Type Tests, which are necessary for the CE Marking of windows, facades and external pedestrian doorsets, under a system 4.

- **2 test chambers Air leakage/Water penetration/Wind resistance: that test air permeability, water tightness and wind resistance.**
- **Thermal bench: that measures the energy efficiency of each system.**
- **Accoustic bench: that checks the efficency against noise.**
- **Mechanical bench: that simulates the continuous repeating of opening and closing of a window in order to guarantee the resistance and durability of its hardware.**
- **Resistance to horizontal and impact loading test bench for light façades.**
- **Resistance to wind loading test bench for solar protection louvres and building lattices.**
- **Static and dynamic test bench for balustrading system.**

R & D Department

MORE THAN 50 EXCLUSIVE SYSTEMS

The research, design and technological applications are situated at the centre of the expansión and growth strategy of CORTIZO. In fact, its R & D department has designed to date **more than 50 exclusive systems** of windows, doors, façades, composite panel and the latest generation of solar protection systems.

The company invests annually **more than 72,000 hours of research**, with an average of 165 Innovation & Development projects.

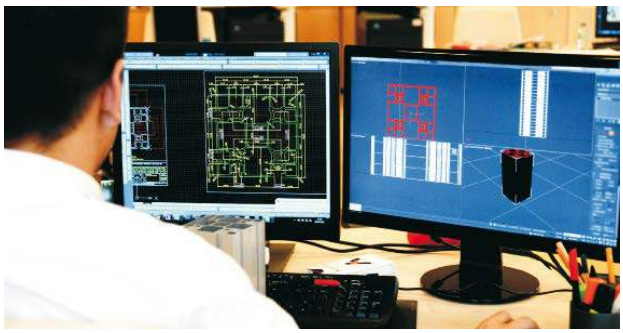

Architectural and Engineering Department

FULL SERVICE FOR THE ARCHITECT

CORTIZO counts on a network of **23 architectural and Engineering departments** that are strategially found in diverse points throughout Europe.

These departments are led by CORTIZO aluminium systems technicians: Engineers, Architects and Technical Architects with wide experience and specific training in aluminium building finishes. They provide **all of the necessary technical support**, and in this way can optimise the suitability and integration of the wide range of CORTIZO systems in the distinct architectonic projects to be carried out.

The objective of this exclusive service is to offer to the professionals in the sector a greater proximity to the provision of integral solutions for building finishes for their projects. Furthermore, CORTIZO offers to Architectural professionals all of the necessary technical support for building finishing materials. From its Department of Architecture & Engineering, they have offered more than 26,000 hours of consultancy that have resulted in over 1,000 architectural projects and in excess of 20,000 technical consultations during the last year.

We speak quality

CORTIZO IS QUALITY

This characteristic is intrinsic to each and all of the phases of its production process. From its **Quality Control Department**, daily exhaustive controls are carried out of all the variables, in each procedure with the objective of reaching the highest standards in this matter.

The appropriate selection of raw materials and control of all the parameters that influence the **extrusion** technique supported by the **ISO 9001** international certification, guarantee the quality of the extruded material.

For its part, the meticulous work carried out regarding surface treatments, has resulted in achieving the most demanding European quality certificates such as **"QUALICOAT", "QUALIDECO" & "SEA SIDE"**, for the **painting process**, and the **"EWWA-EURAS"** certificate for the **anodizing process**, that recognises and guarantees a high level of quality.

The quality of the CORTIZO final product, is based on the strict **tests** carried out both in national and international official laboratories, as well as by technical personnel in **its own test centres**.

- **Extrusion: ISO 9001.**
- **Powder coating: Qualicoat - Seaside, Qualideco.**
- **Anodizing: Ewaa-Euras.**
- **Polyamide: ATG.**
- **Profiles with Thermal Break System: NF 252.**
- **Testing of Thermal Break according to European standards EN 14024.**

CORTIZO / FACADES

TECHNICAL INFORMATION

01 / STANDARD PROFILE RANGE: MULLIONS & TRANSOMS

This new range of light façades is comprised of a standard system with an **ample variety of mullions and transoms** that resolve the different aesthetic and constructive needs of the architectonic projects by using integral solutions.

The standard profile range, as well as the complementary accessories, are common in these new façade systems. The wide range of these profiles and their mechanical unions allows the execution of all types of façades (vertically, inclined, 90º corners, corners & polygonals), as well as the resolution of glazing modules that are large in size and weight.

MULLIONS

There is a complete range of **19 mullion profiles with a 52 mm seen section** that have dimensions from 16 mm in depth up to 250 mm in order to cover the different static needs of each architectonic project.

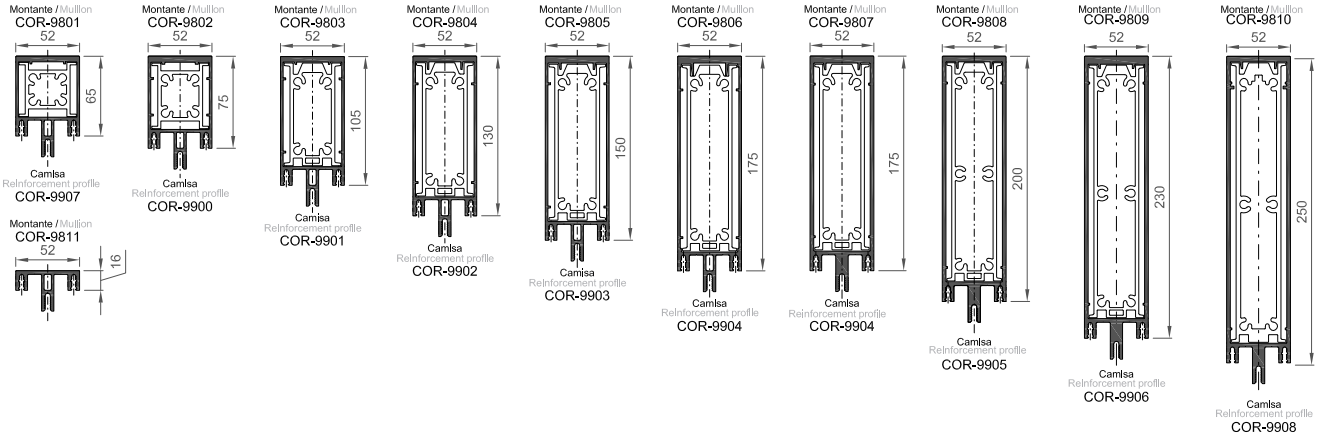

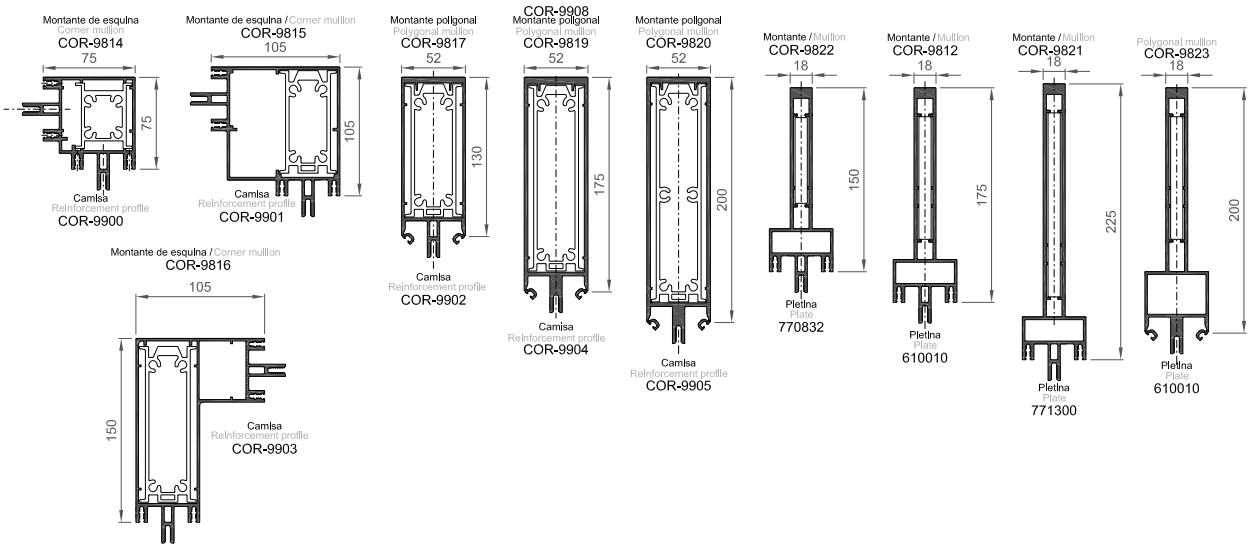

» **STRAIGHT STANDARD SOLUTION**

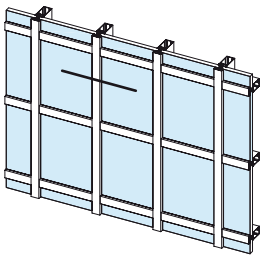

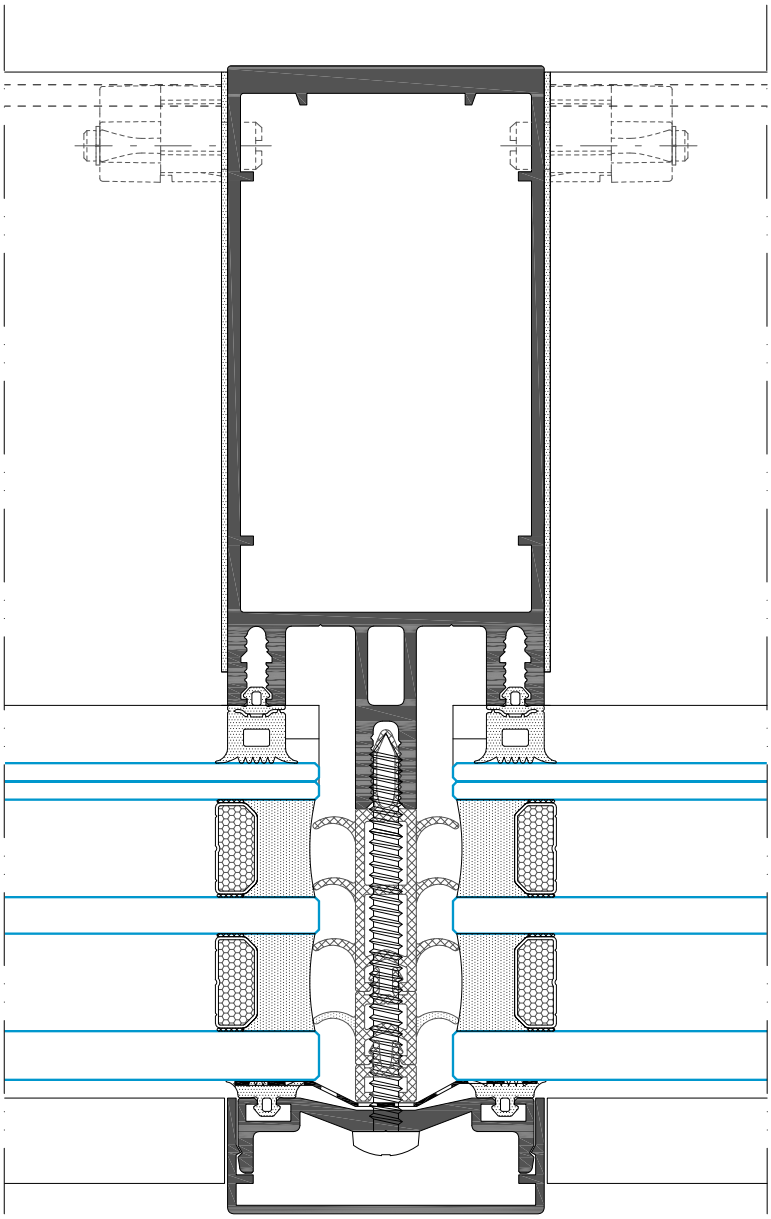

» **90º INTERIOR CORNER SOLUTION**

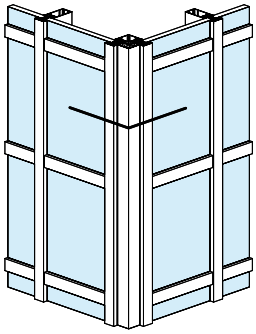

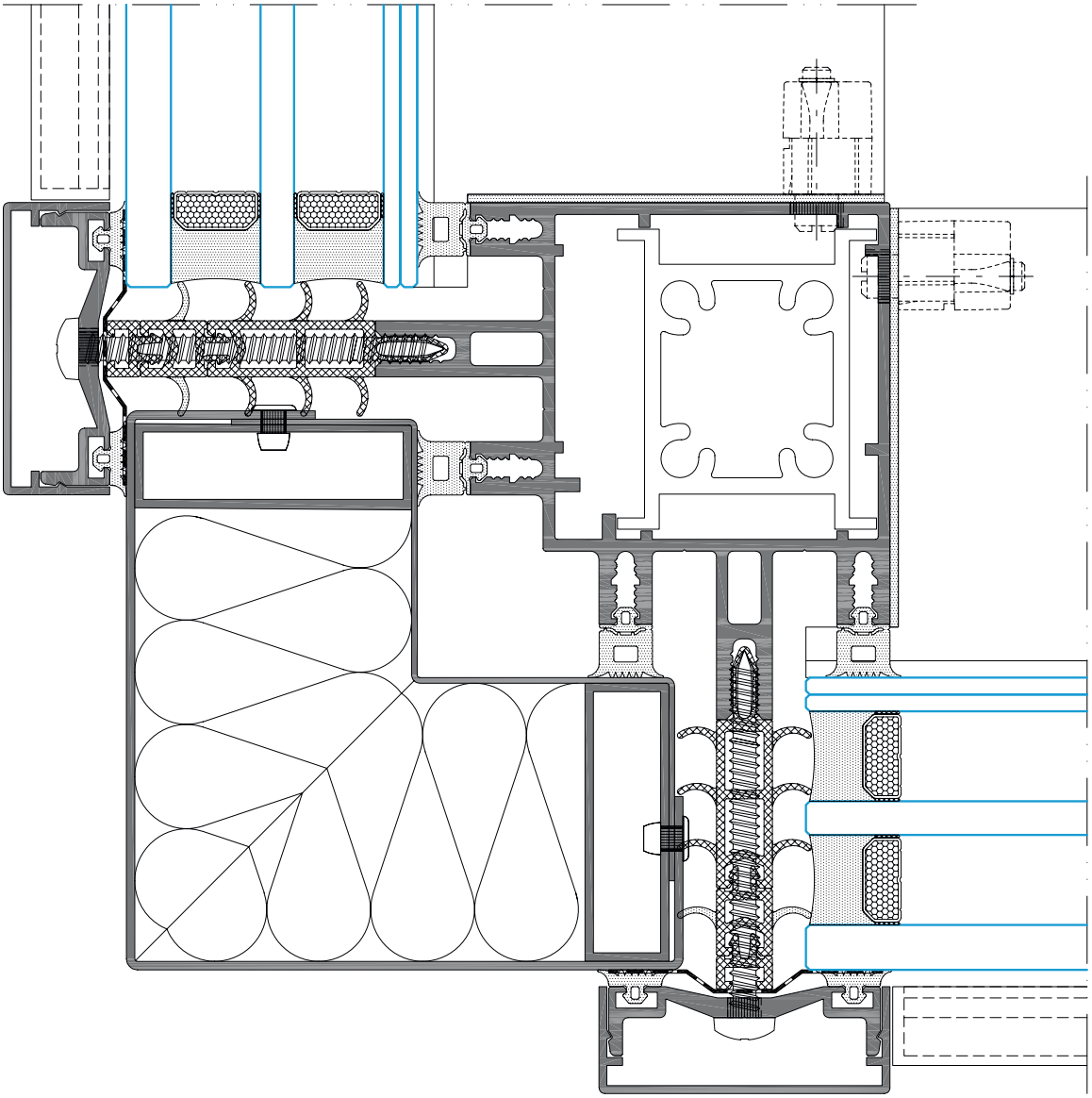

N/S

» **90º EXTERIOR CORNER SOLUTION**

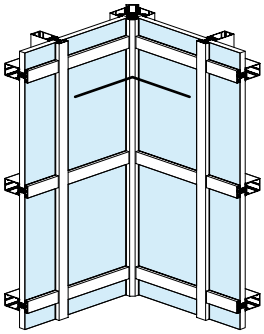

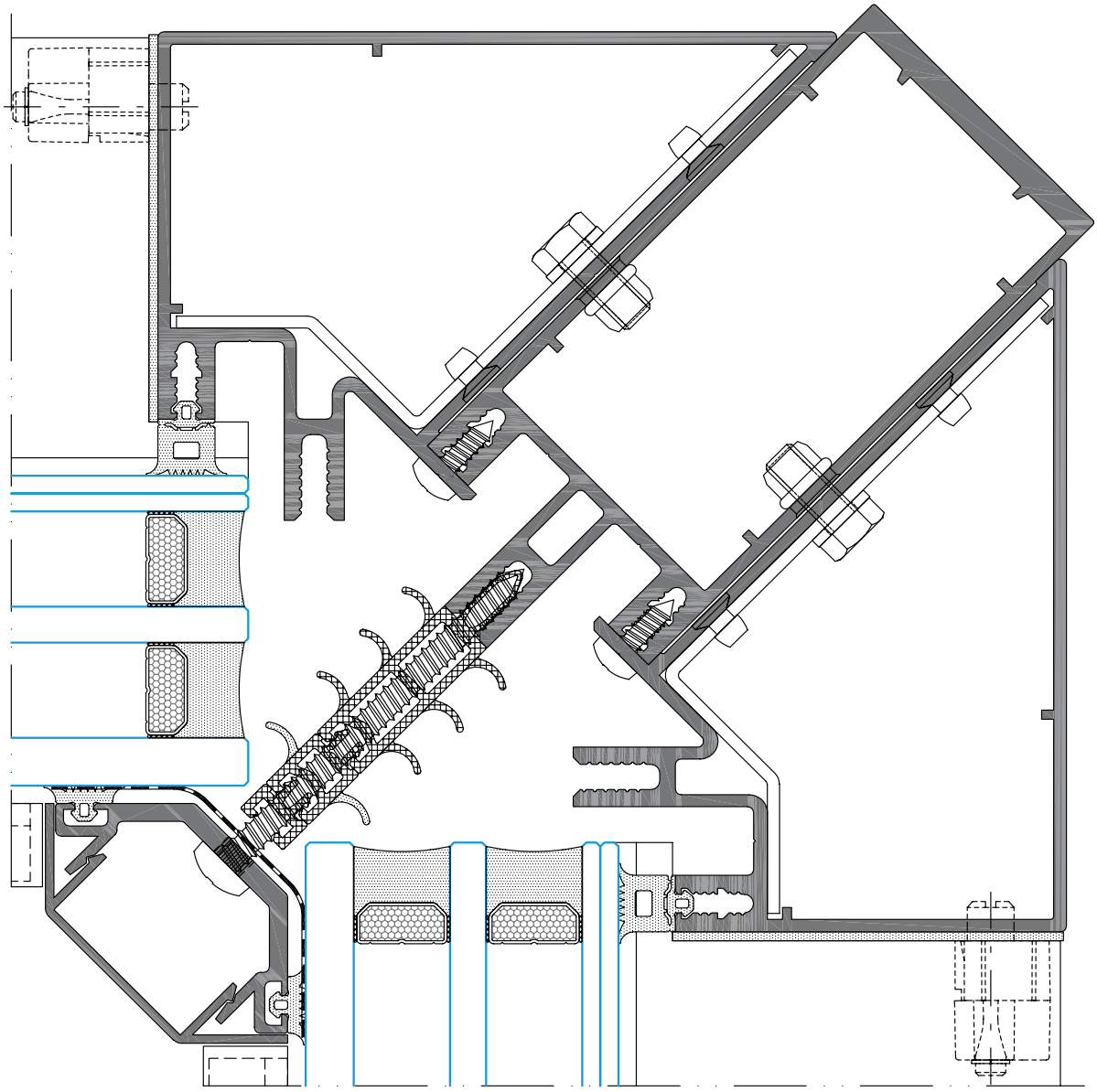

N/S

» **POLYGONAL SOLUTION WITH FOLDABLE FIN MULLION (FROM 90º TO 169º)**

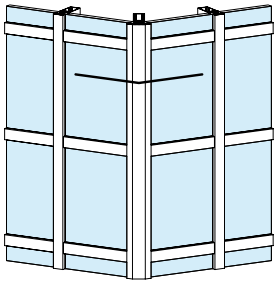

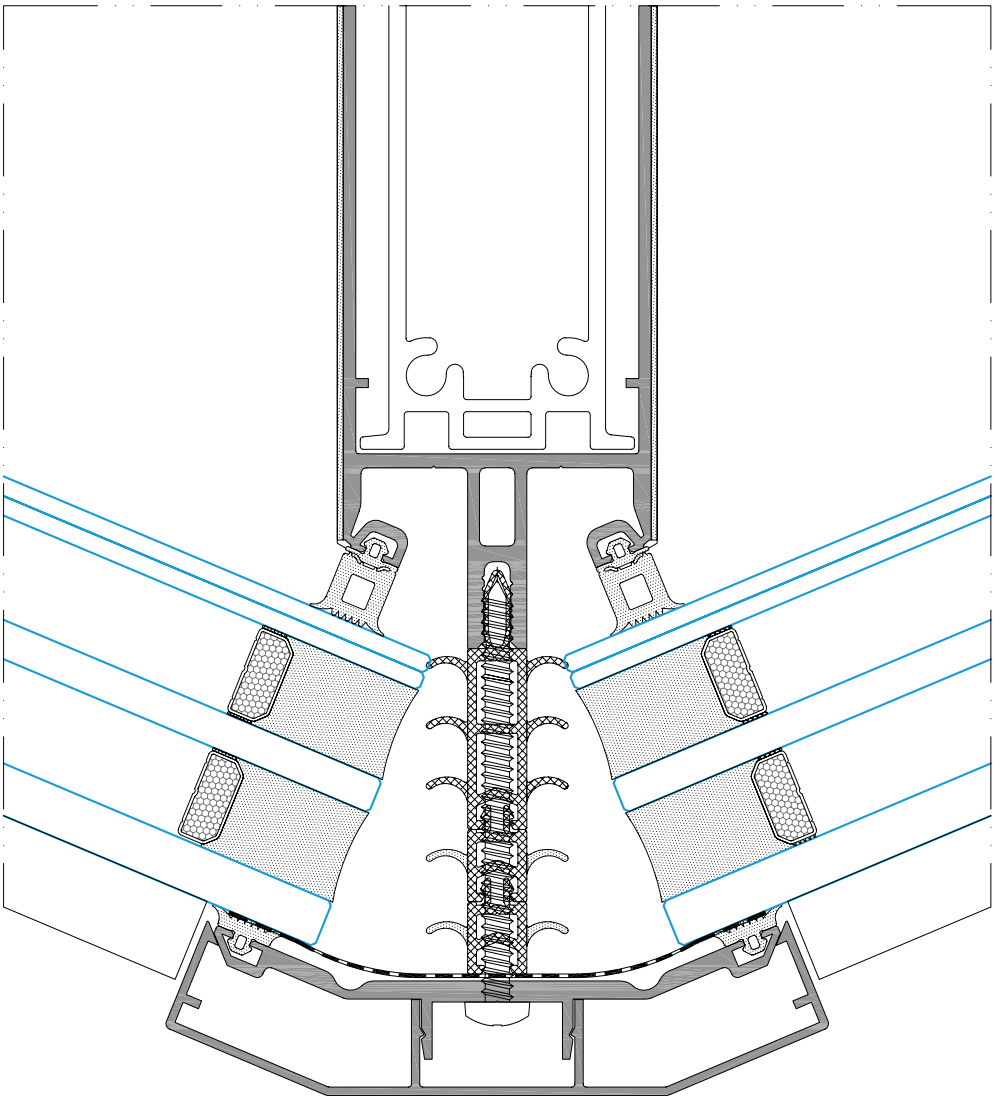

N/S

TRANSOMS

A wide selection of **17 transoms with depths from 22.50 mm to 255.50 mm** that complete the standard profile range for these light façade systems. Just as the mullions, these profiles have a seen section of 52 mm.

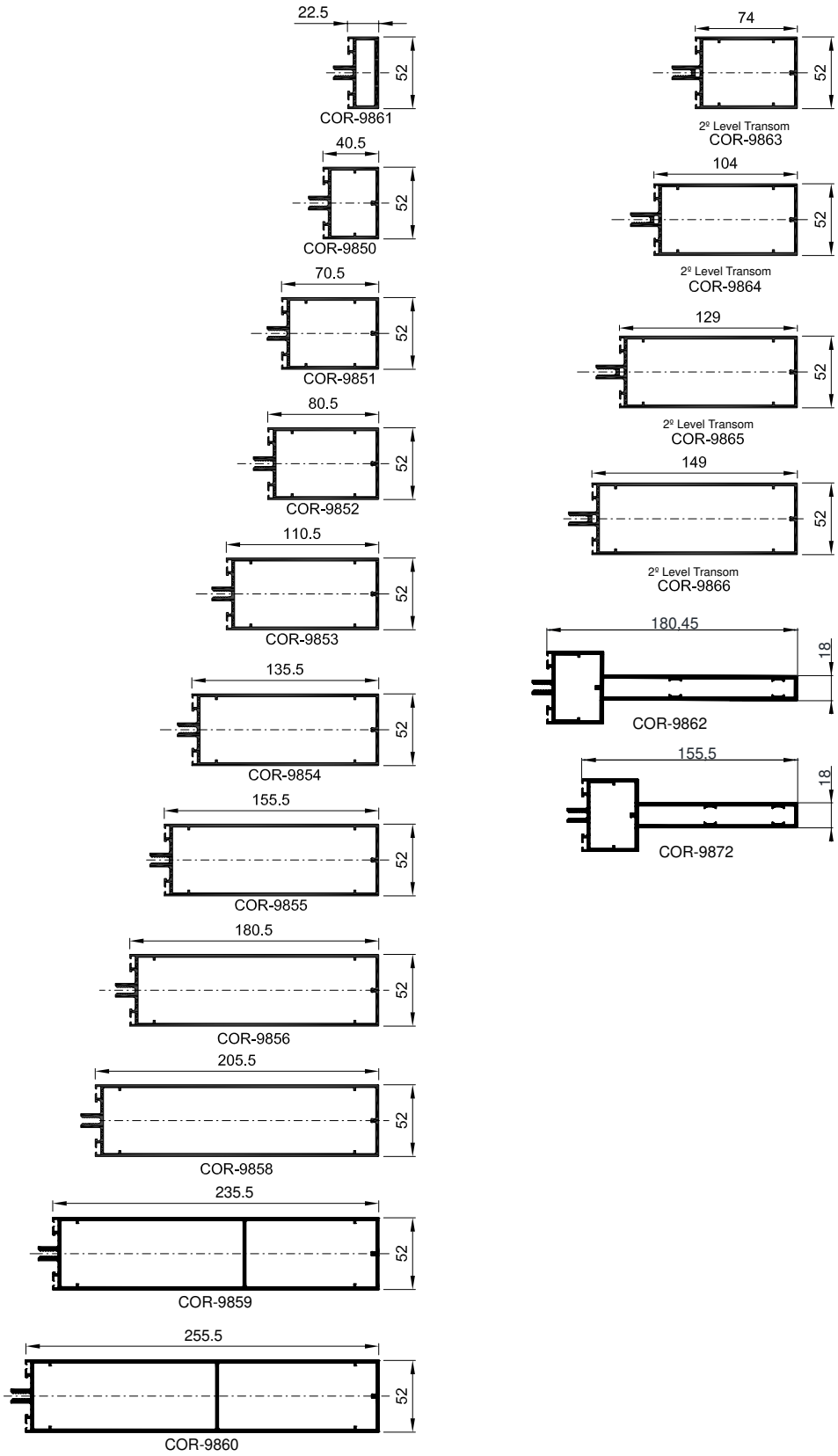

» **STRAIGHT STANDARD SOLUTION**

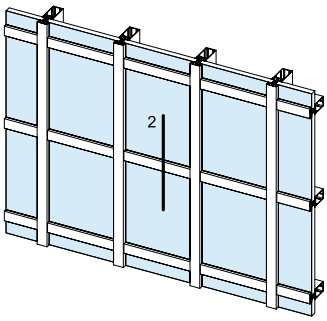

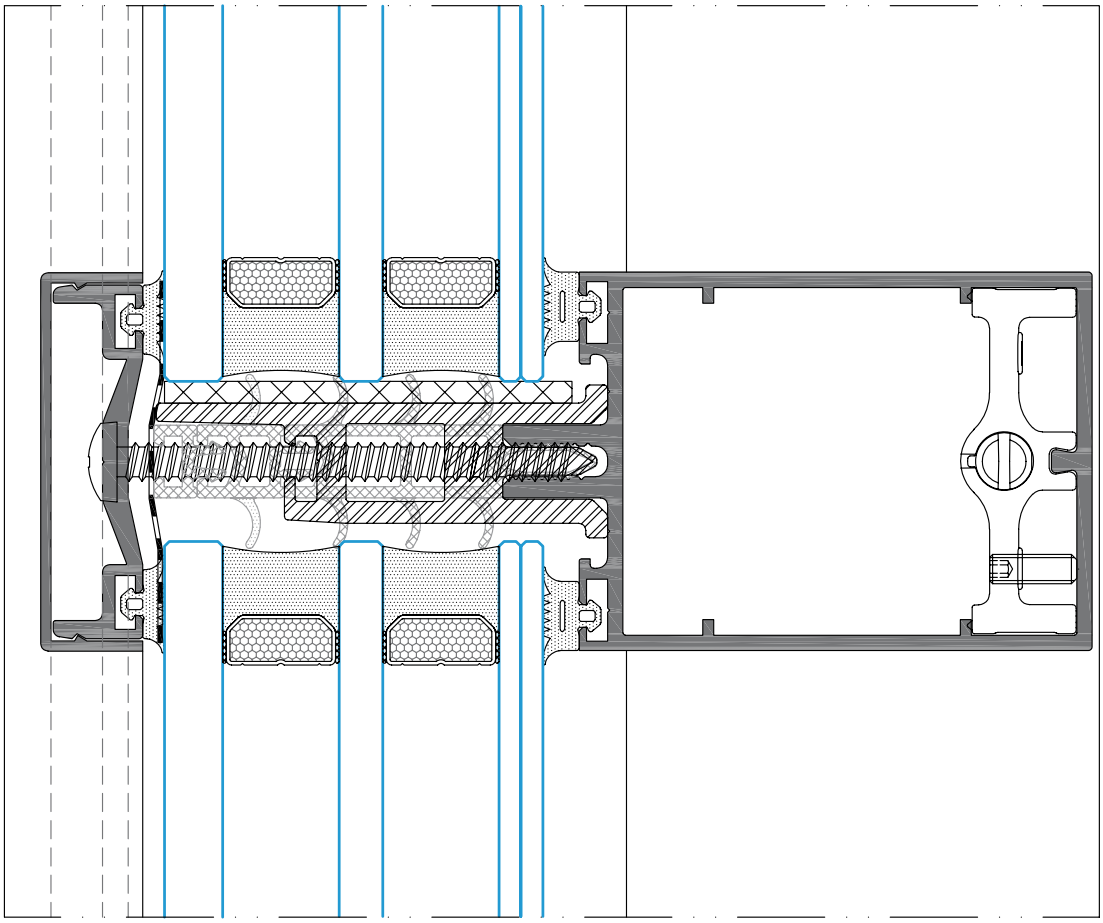

» **CONCAVE POLYGONAL SOLUTION (FROM 90º TO 169º)**

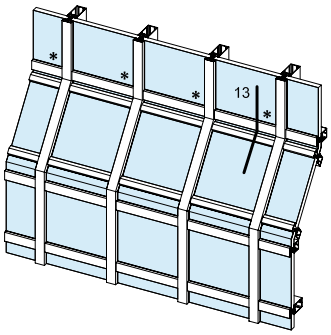

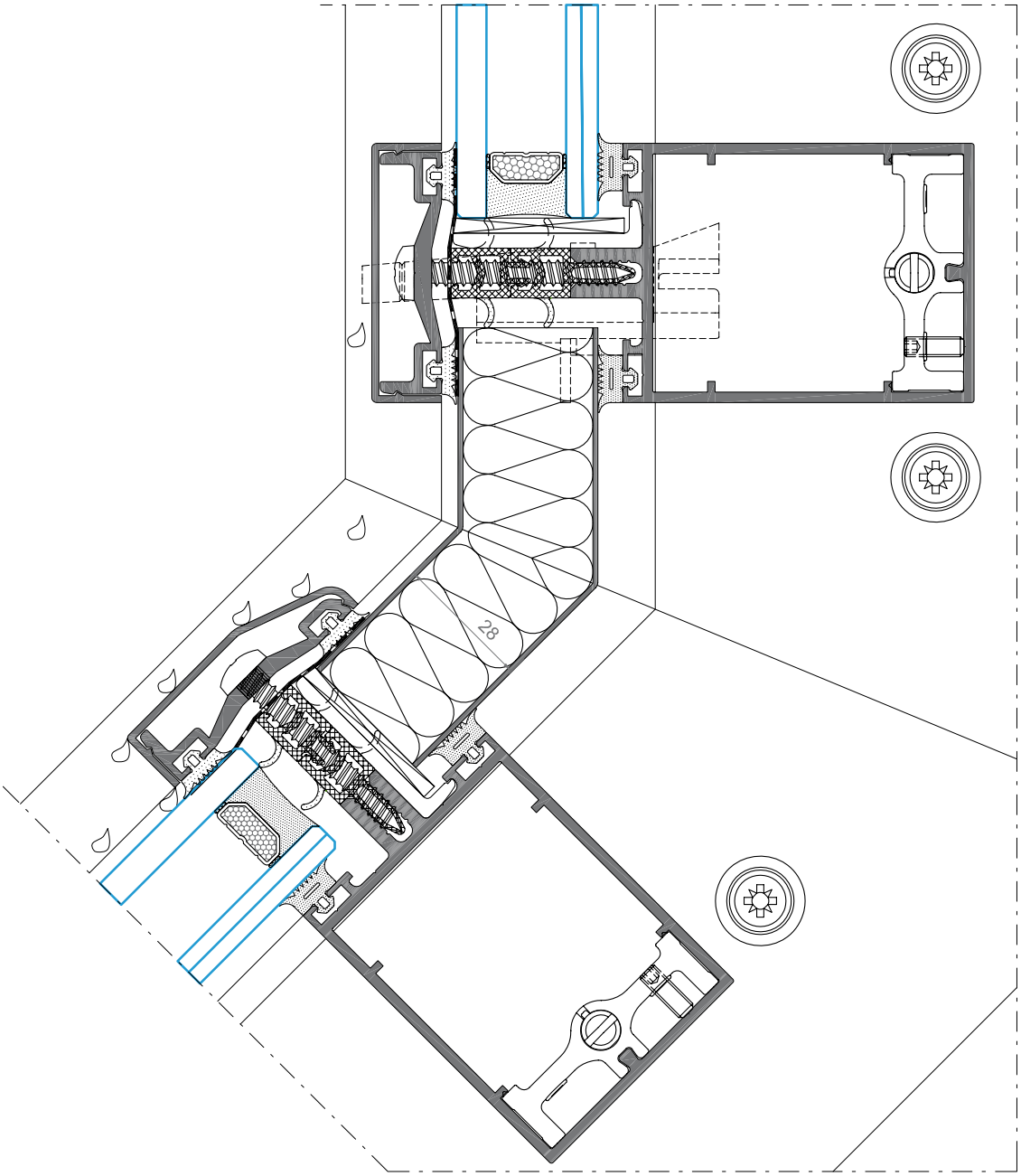

» **CONVEX POLYGONAL SOLUTION (FROM 90º TO 169º)**

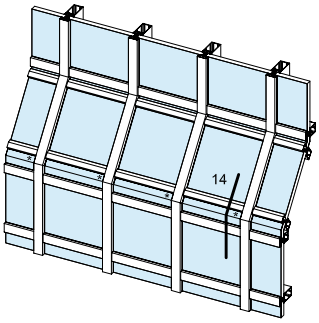

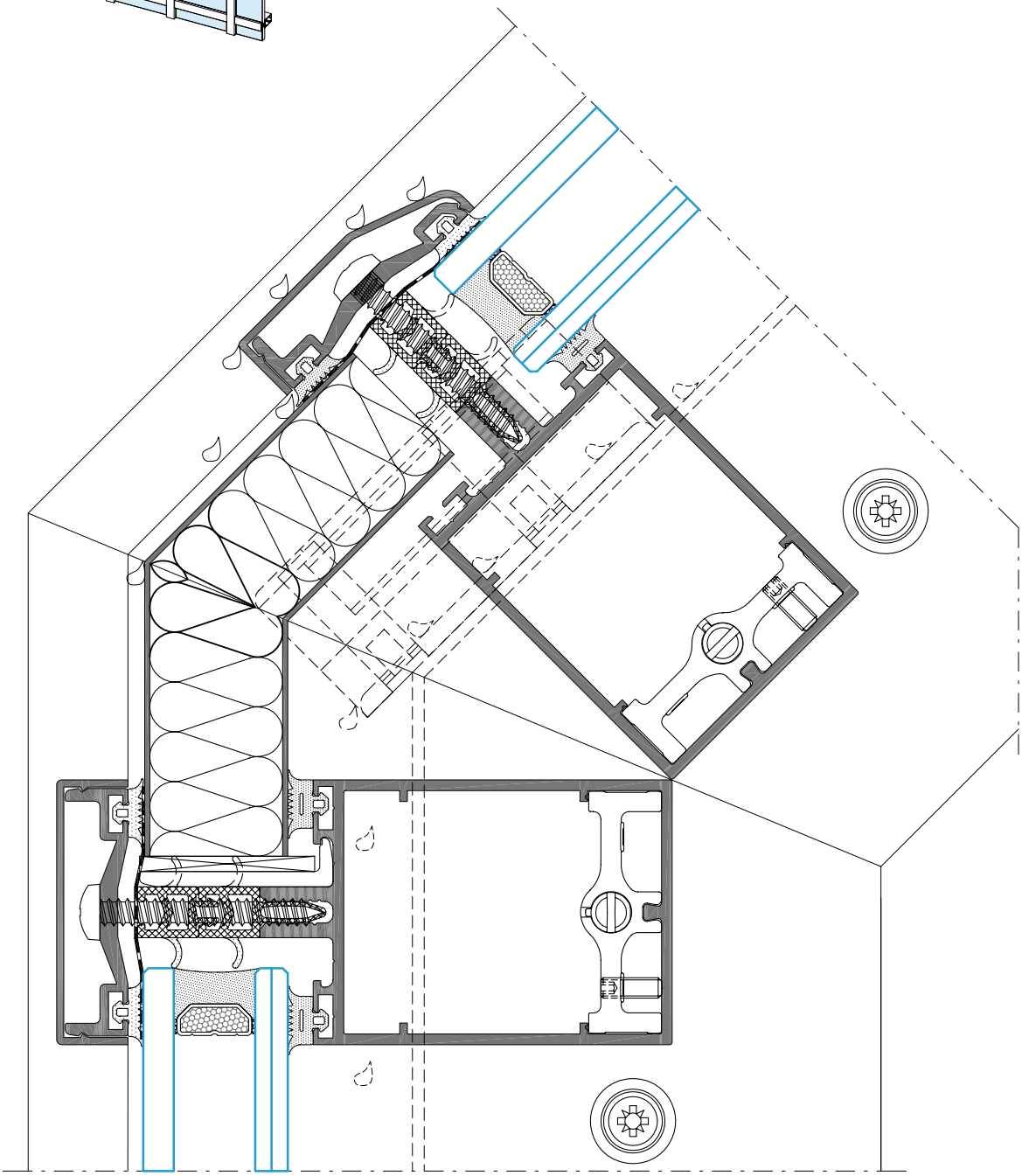

S/E

STATIC CALCULATION CHART FOR MULLIONS – WIND LOADING

The diagrams represent the static calculation for mullion wind loadings in curtain walling as indicated in *Figure 1*.

A wind strength has been considered that provokes a loading which is uniformally distributed and is perpendicular, setting itself for the calculation, a distribution of rectangular loadings.

The façades weight as well as the glass weight are considered negligible against wind strength.

The limits that have been considered are those indicated by the EN 13830 European norms which specifies that, under wind strength, the frontal deflection of the mullions must not exceed the lower of the values between H/200 or 15 mm.

Said deflection is calculated using the following mathematical formula:

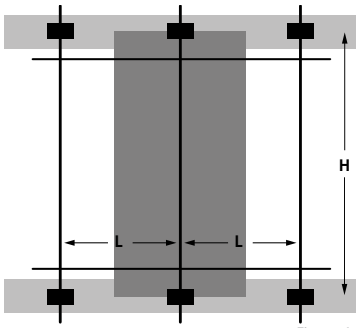

Figure 1

$$f_{max} = \frac{5 \cdot Q \cdot H^3}{384 \cdot E \cdot I}$$

Therefore:
- Q is the total wind loading in daN.
- H is the mullion length in cm.
- E is the module of elasticity of aluminium in daN/cm².
- I is the Moment of Inertia of the section according to the perpendicular axis to the wind action in cm⁴.

800 Pa.

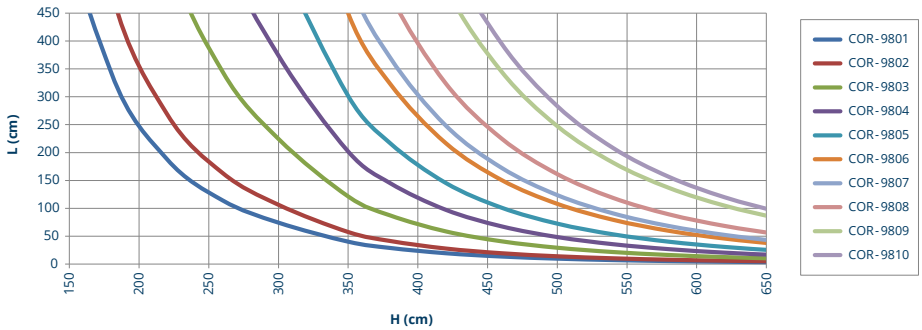

1200 Pa.

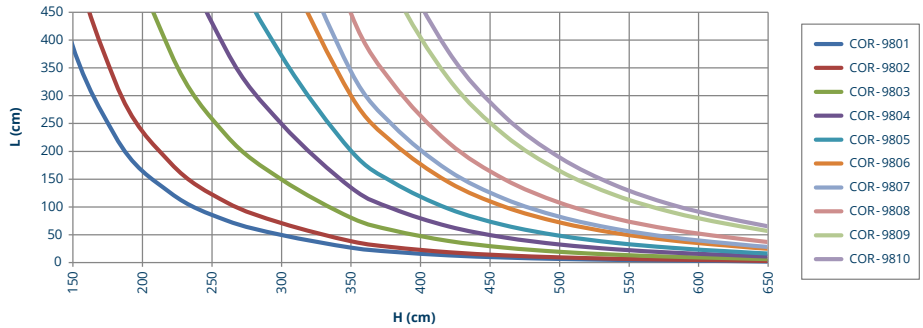

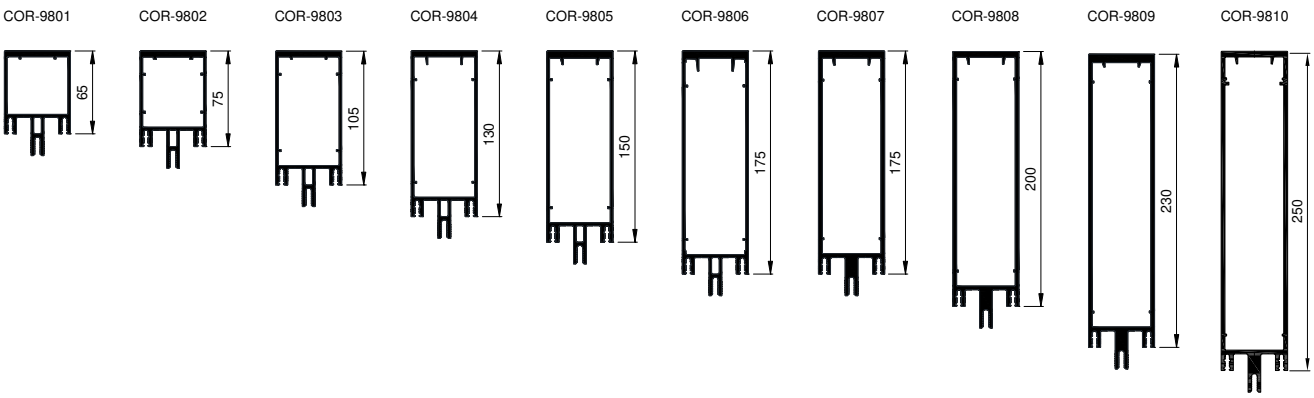

02 / TYPES OF MECHANICAL JOINS IN T MULLION-TRANSOM

AUTOMATIC ANTI-ROLL STOP (FRONTAL ASSEMBLY)

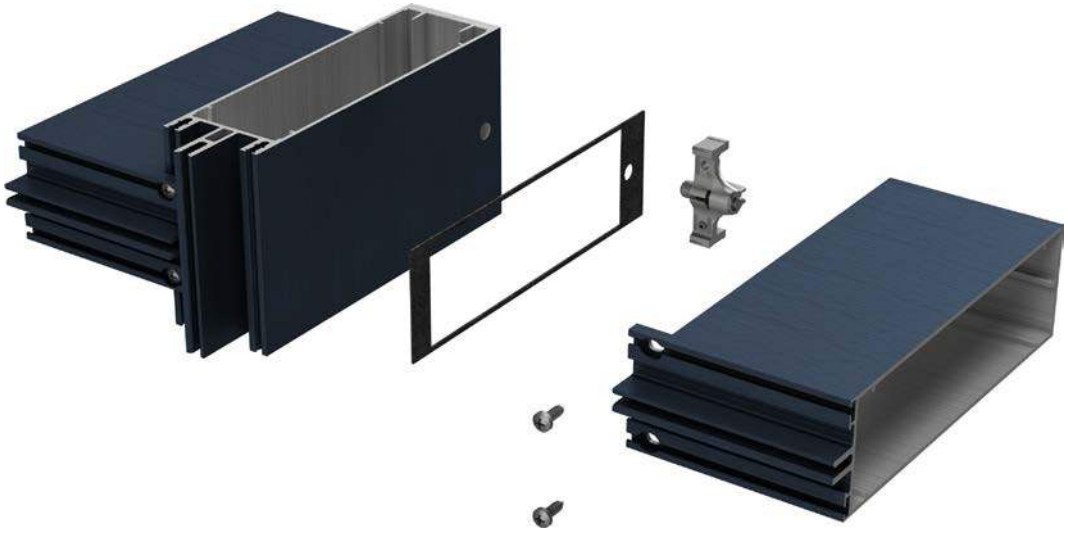

ADJUSTABLE STOP

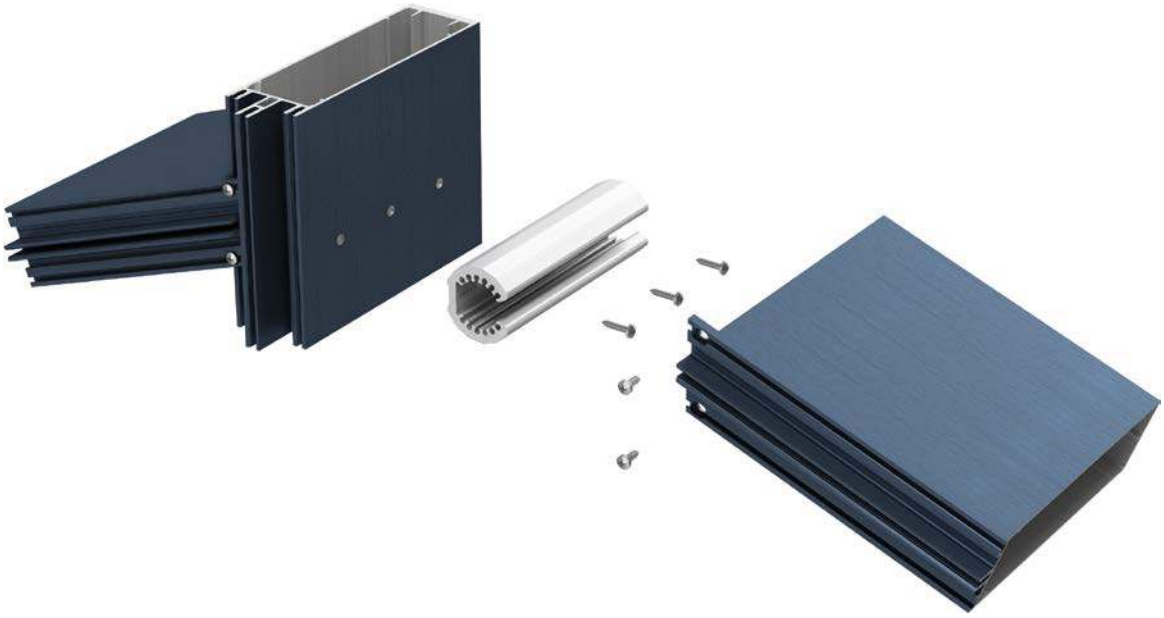

STOP FOR POLYGONALS (UP TO 300 KGS)

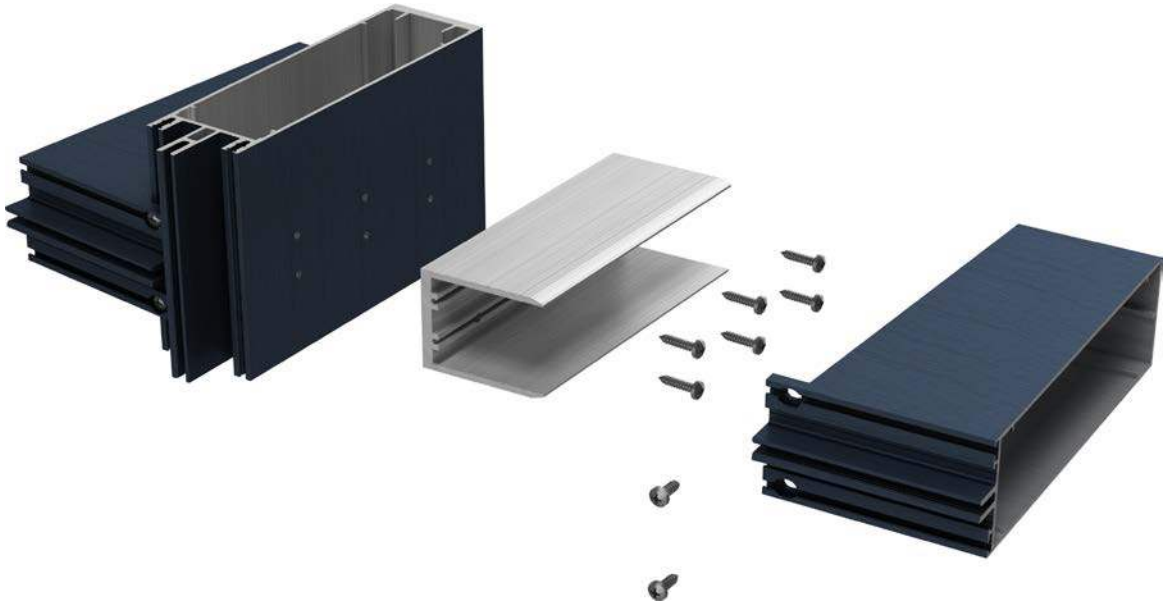

HEAVY LOADS STOP (UP TO 400 KGS)

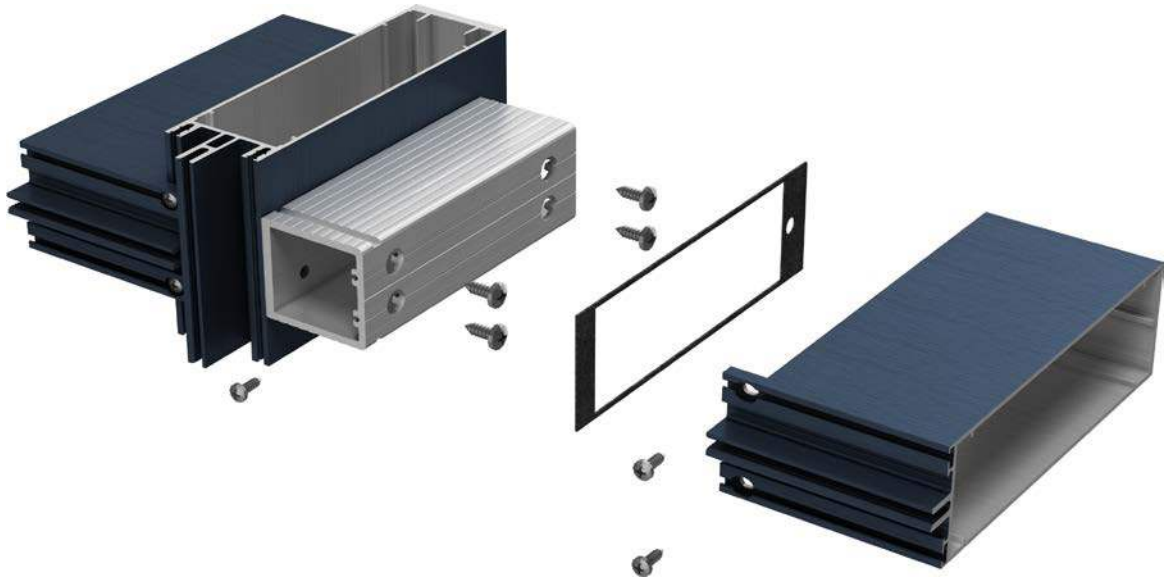

GLAZING SUPPORT FOR HEAVY LOADS (UP TO 750 KGS)

ONLY FOR
TP-SG-TPH-TPV FAÇADE

03 / TYPES OF FIXINGS TO STRUCTURAL FRAME

START & ENDING

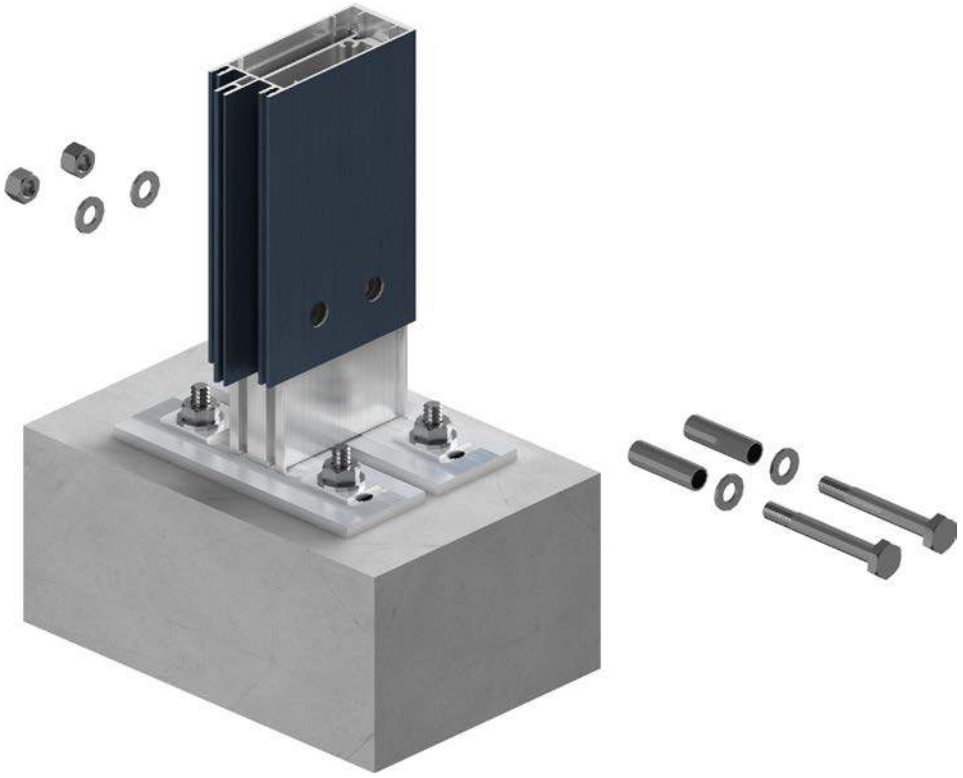

FRONT OF SLAB (THREE DIMENSIONAL ADJUSTMENT)

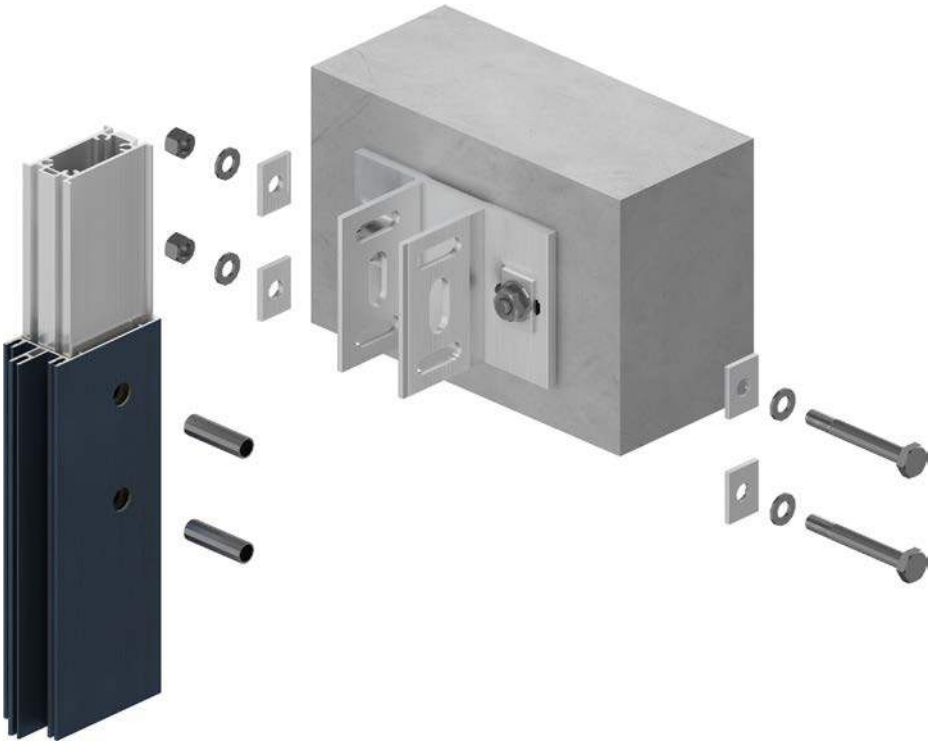

TOP SLAB SURFACE (THREE DIMENSIONAL ADJUSTMENT)

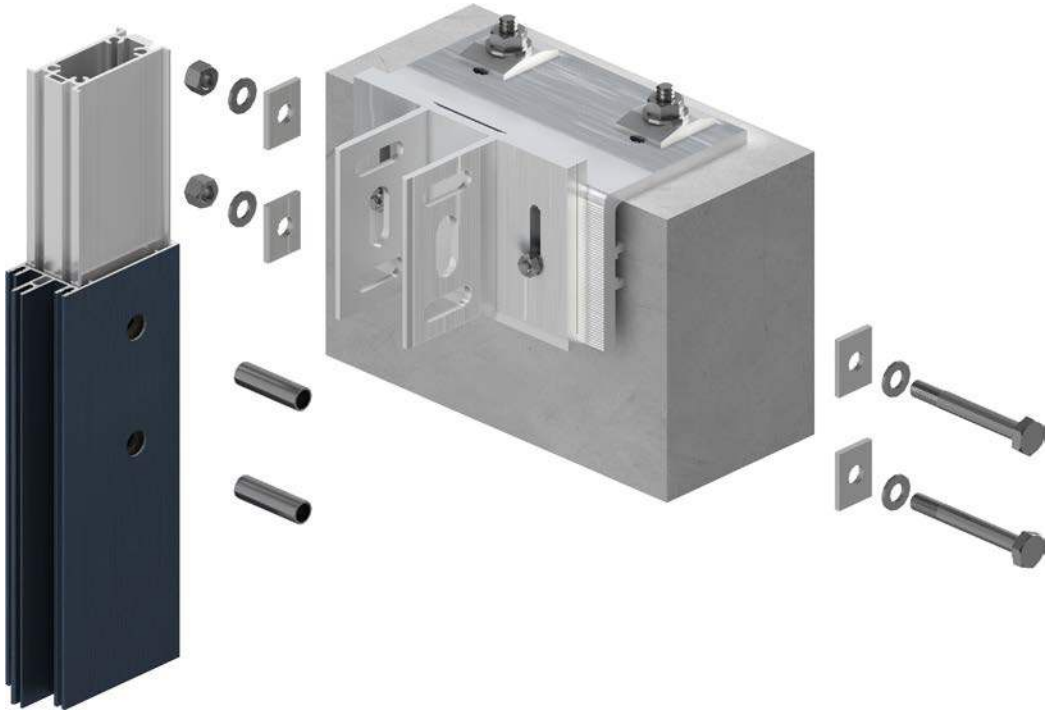

04 / VENTILATION AND DRAINAGE

DRAINAGE LEVELS

The CORTIZO façades has been designed in such a way that **the mullion and transom drainage channels at different levels can be found in different planes**. This implies that **the possible condensations will be conducted from the narrower transom drainage channels to the mullions and from there towards the exterior by way of continuation parts and the pipettes**.

The same channels also serve as an internal ventilation of the four glazing sides.

The three profile levels of the curtain wall appear in order to respond to the different modulations that are presented in architecture for modern façades and concretely for those cases where the vertical mullion merges a secondary transom (*See drawing*).

This presents a lack of continuity in the drainage channel levels which is resolved by including in the system an intermediate transom also known as a second level that will require additional machining in the mullion.

» **FLUSH MULLIONS & TRANSOMS FOR 1st, 2nd & 3rd LEVEL**

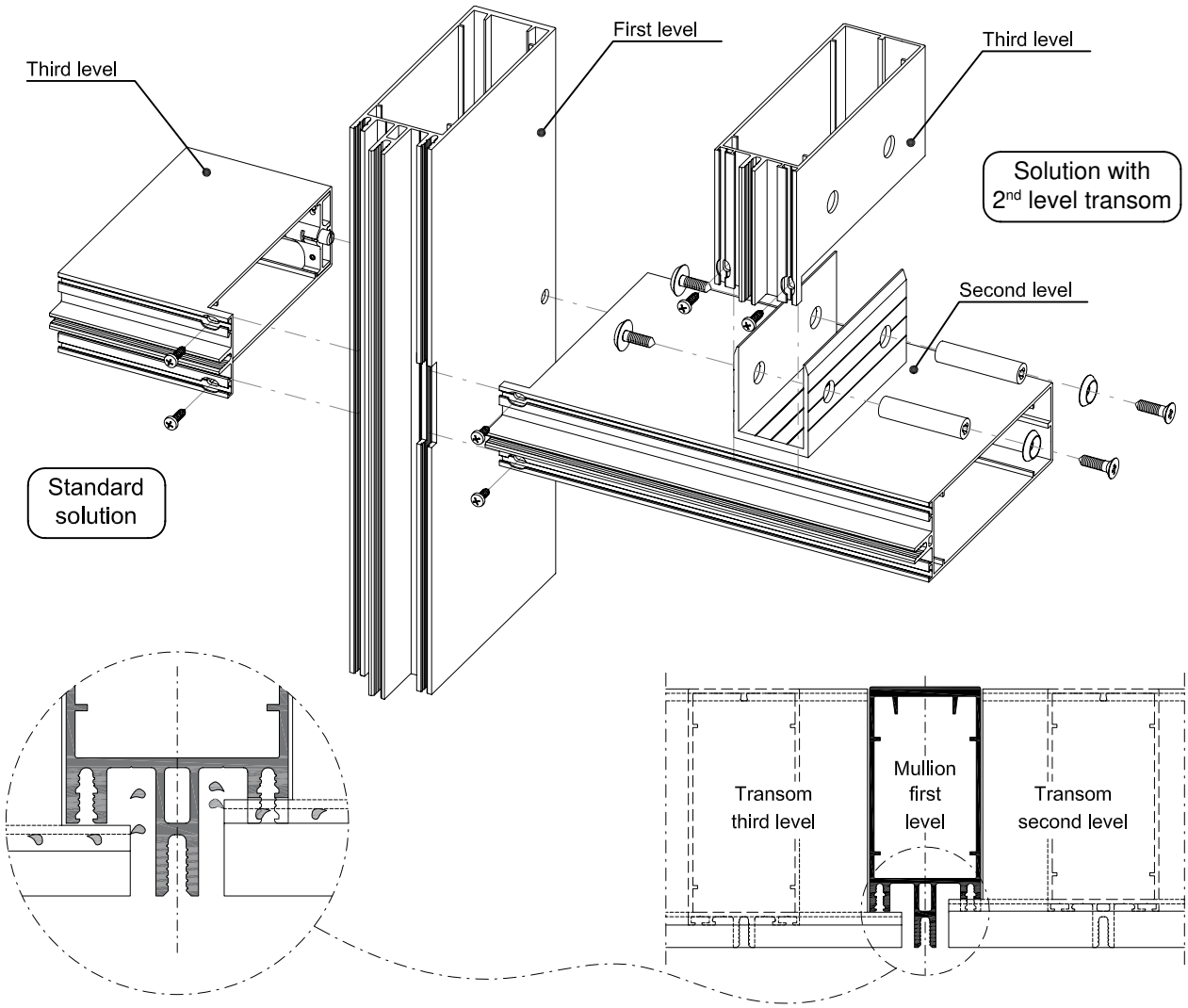

PIPETTES AND CONTINUATION PARTS

In order to direct the water to the exterior due to condensation, two plastic accessories are used (pipette* and continuation parts) that are designed in such a way that they fit perfectly in to the mullion drainage. These elements incorporate various internal spaces that are defined by the mullion and transom walls and its objective is to house the sillicone that will be injected through various frontal orifices which must be expressly carried outfor this purpouse. This ensures the weather tightness between the aluminium profiles, the pipette and the continuation part.

The **continuation part** carries the water that falls from the top mullion drainage channels and immediately to the bottom in the joint area between them.

The **pipette** collects the water that arrives from the mullion drainage channels (and generally from the attached transoms) and it is ejected to the space that exists between the pressure sections and the cover and far from the areas that require weather tightness. Also, the system's ventilation helps to create an air circuit within the interior of the facade.

To ensure that the pipette works correctly, it must be installed every 8 metres as a maximum measurement or every 8 transoms in the case of very dense horizontal spans.

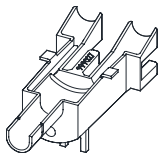

Pipette 20 - 34 mm

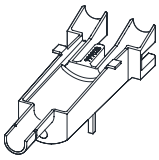

Pipette 36 - 50 mm

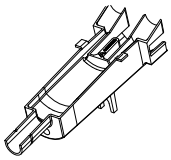

Pipette 50 - 64 mm

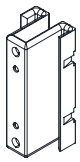

Continuation part

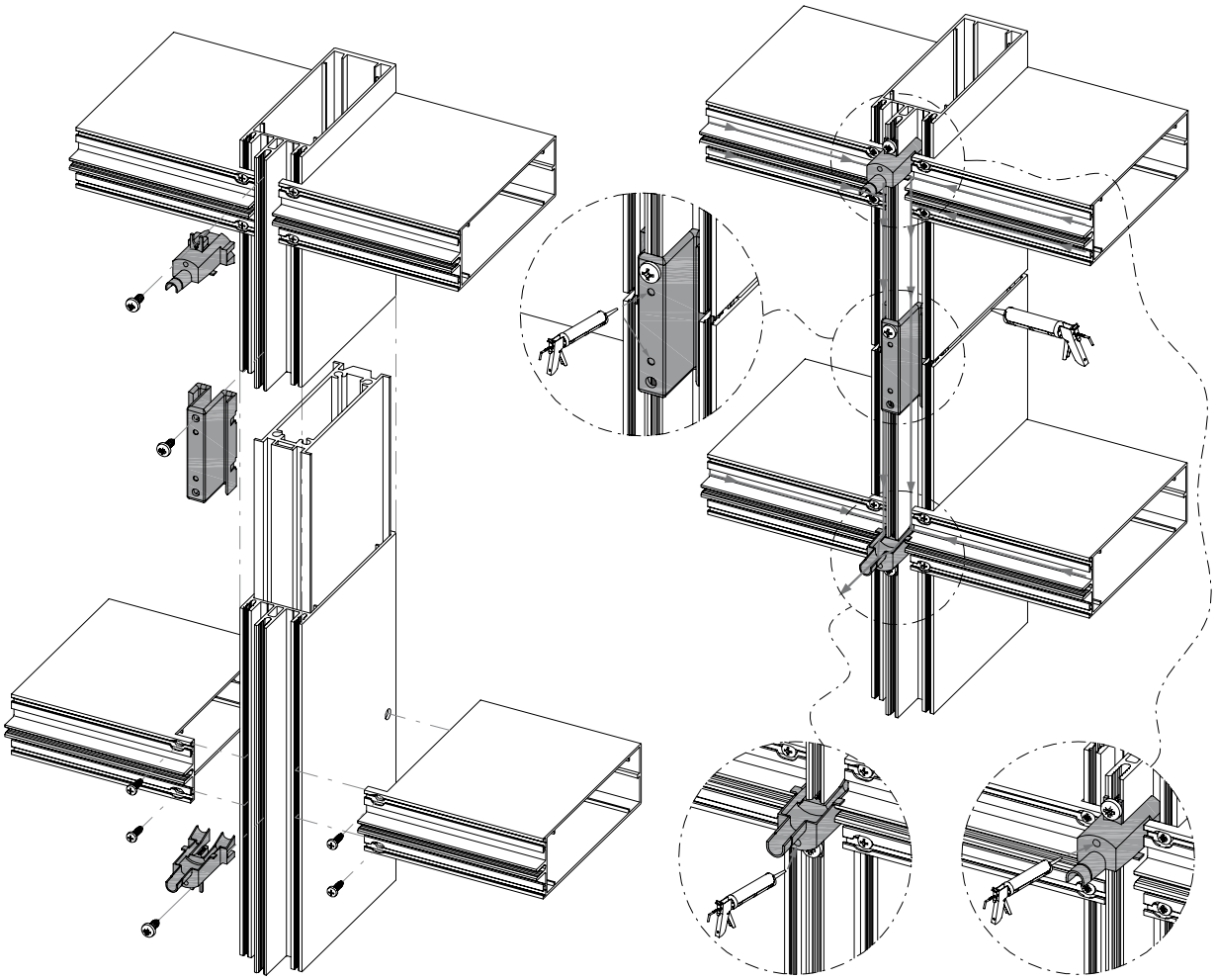

* Valid for TP 52 & TPV 52 systems.

05 / WEATHER TIGHTNESS

The weather tightness of a traditional curtain wall is conditioned by the correct working of the gaskets that define the glazing (or panels) both in the interior as well as the exterior.

The mullion and transom joins are made by milling the transom over the mullion screwports, and between them it is appropriate to fit a plastic part that will accommodate this join and act at the same time as a water barrier.

The critical point is found precisely in this meeting of the vertical profiles (mullions) with the horizontal profiles (transoms). In order to ensure weather tightness of the last barrier (the inside), CORTIZO offers two solutions: tear strip gaskets and totally vulcanized angle.

TEAR STRIP GASKETS

This solution consists of **a mullion internal gasket with a crease that can be partially separated at the transom meeting point, without completely leaving the horizontal profile join with the vertical unprotected** (*See drawings*). It provides an elastic support (and water tight) between the milled area of the transom and the mullion screwports. The sectioned area of the mullion internal gasket must remain flush with the transom internal gasket (which will be continuous) previously impregnated with some specific product that ensures that it is vulcanized (as well as the weather tightness) between them.

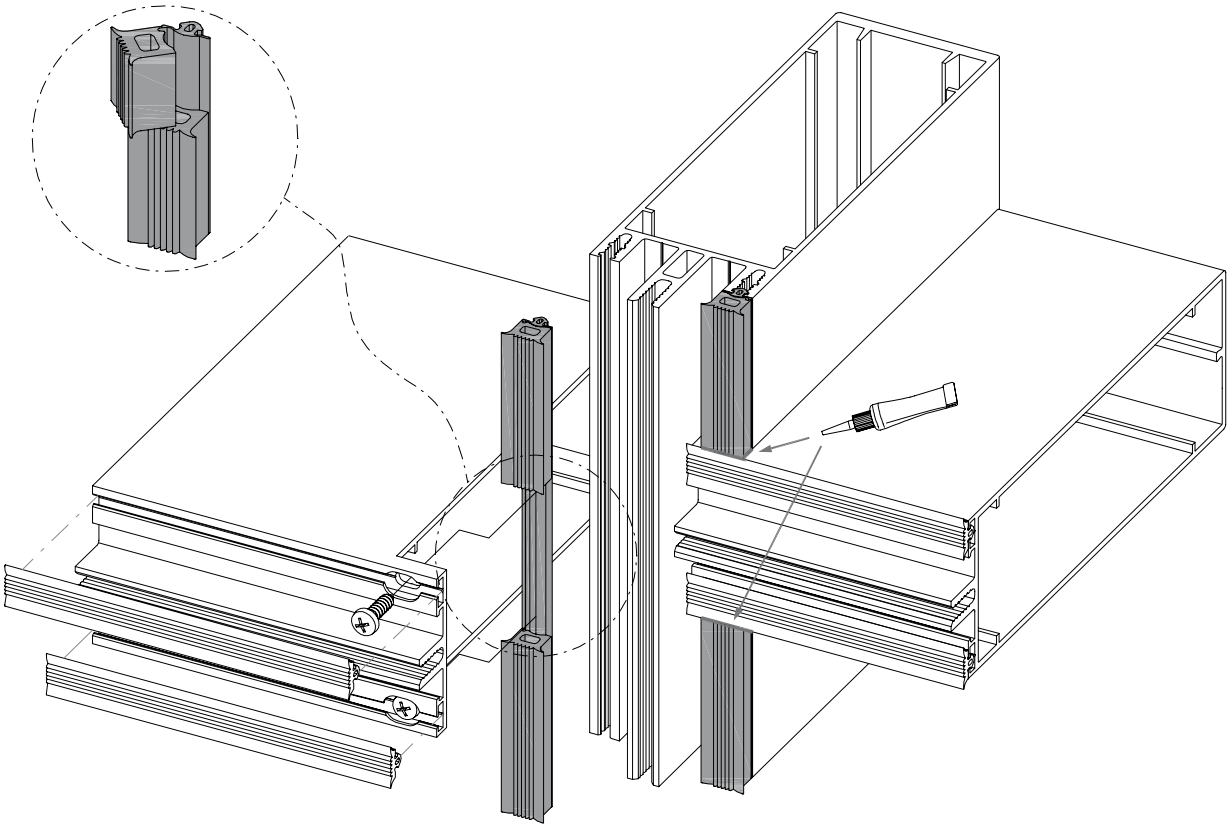

9.50 mm gasket

11.50 mm gasket

13.50 mm gasket

TOTALLY VULCANIZED ANGLE

It is a part that is made by moulding, as a consequence, it **permits the integration of different gasket thicknesses for the mullion and transom**, and at the same time the contact area between the vertical and horizontal profile. Once the most delicate areas have been secured (the corners) all that remains is to fit the perimeter gaskets in the areas designed for such an effect and apply a vulcanizer that ensures continuity.

Meeting angle 9.50 - 3 mm

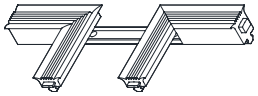

Meeting angle 11.50 - 5 mm

Meeting angle 13.50 - 7 mm

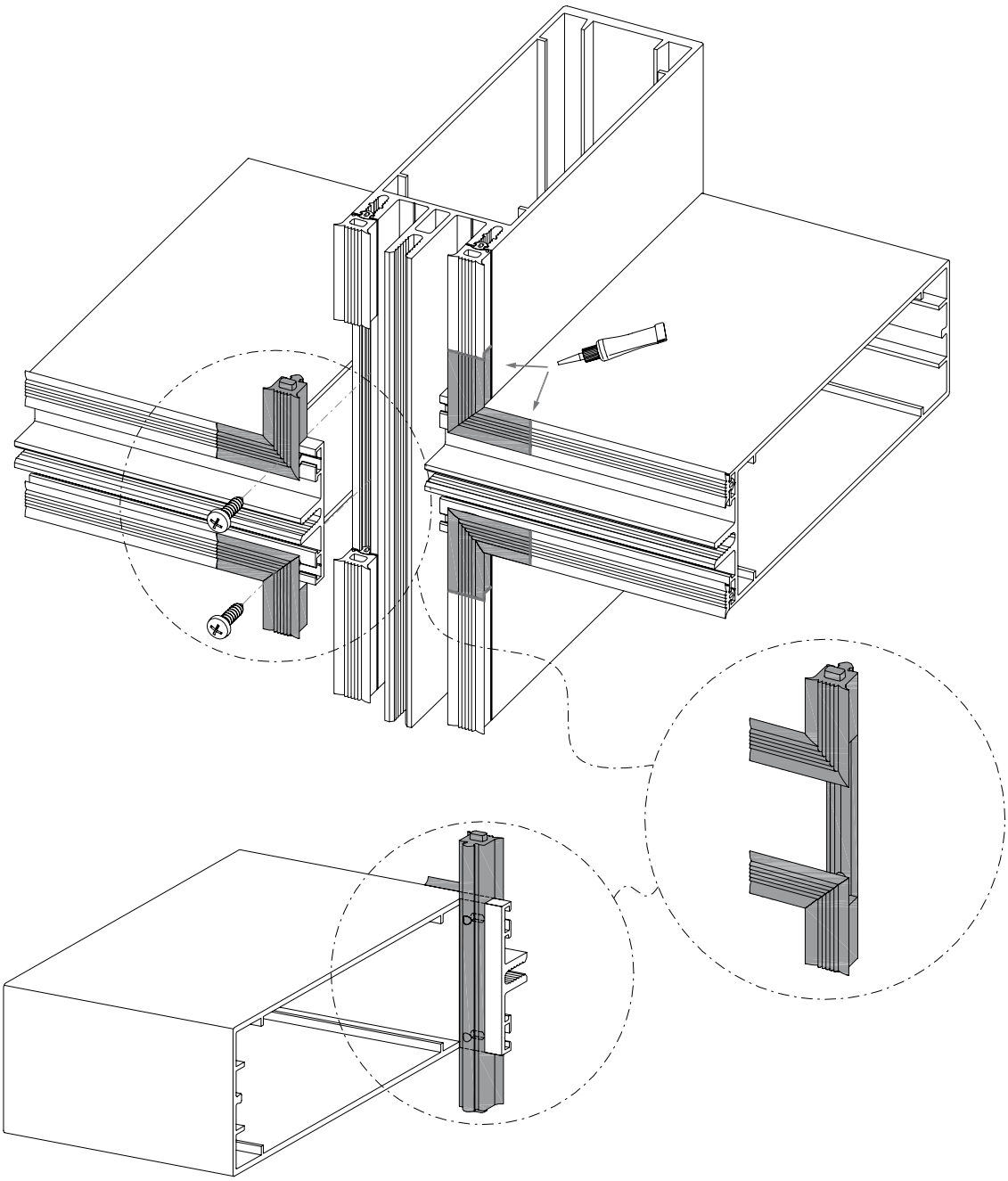

06 / THERMAL INSULATION

THERMAL BREAK

With an ample area of thermal break, in these façade systems they become **very energy efficient building enclosures**, reaching the maximum performance in thermal insulation.

The different co-extrusion profiles made from rigid and soft PVC designed with internal air chambers favour energy efficiency. **The possibilities of the combination of both types achieve total versatility** to adapt to the diverse glazing compositions that are selected for the glazing of each façade and can reach in certain cases a maximum thermal breaking depth of 66 mm.

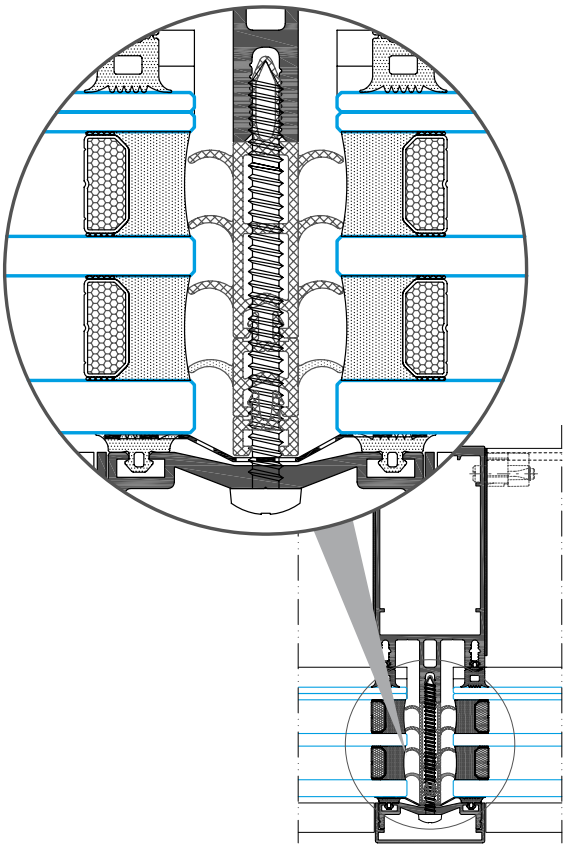

THERMAL BREAK MATERIAL CONDUCTIVITY

MATERIAL	TYPE	VALUE
PVC	RIGID	0.17 W/mK
	FLEXIBLE	0.14 W/mK
POLYAMIDE		0.30 W/mK

PROFILES

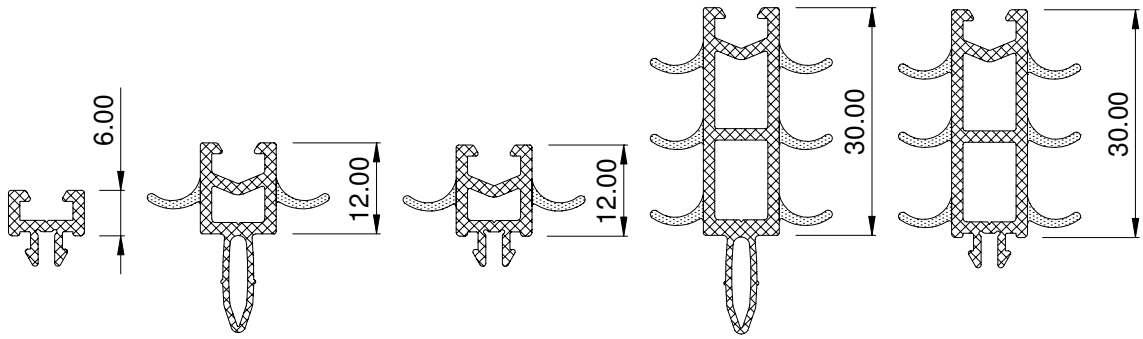

1:1

COMBINATIONS

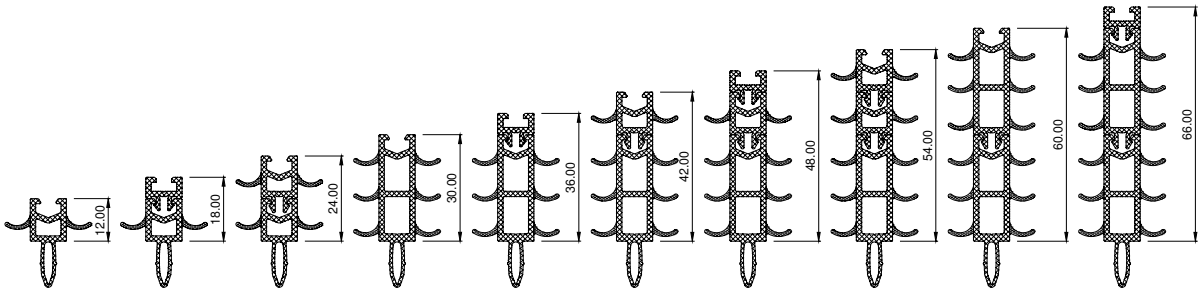

N/S

TRANSMITTANCES*

TP 52
U_{CW} from 0.6 (W/m²K)

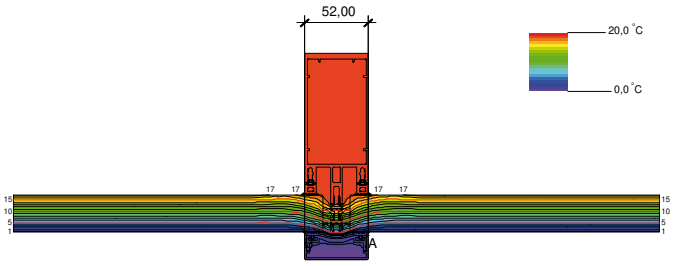

SG 52
U_{CW} from 0.6 (W/m²K)

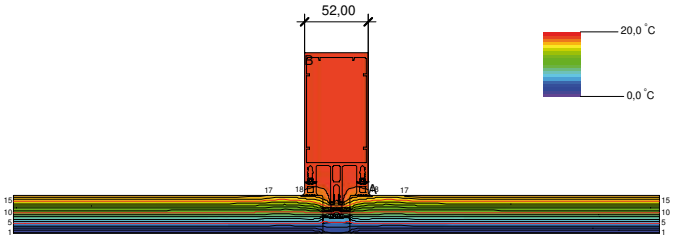

TPH 52
U_{CW} from 0.6 (W/m²K)

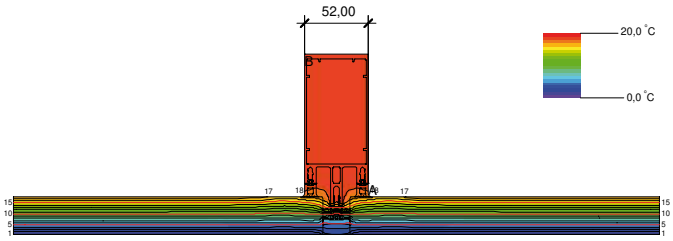

TPV 52
U_{CW} from 0.6 (W/m²K)

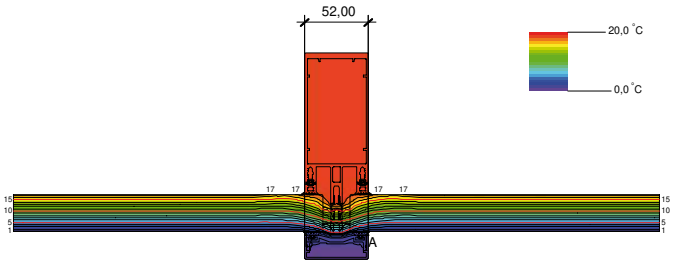

ST 52
U_{CW} from 0.7 (W/m²K)

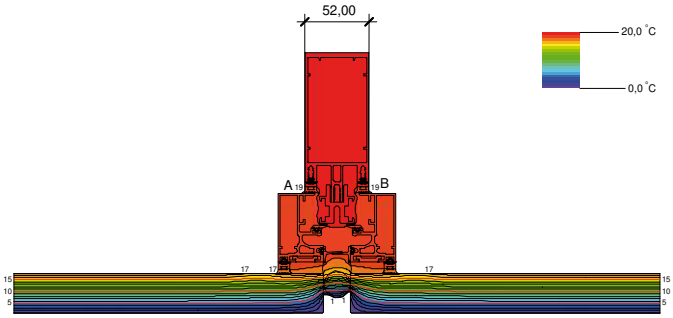

SST 52
U_{CW} from 0.8 (W/m²K)

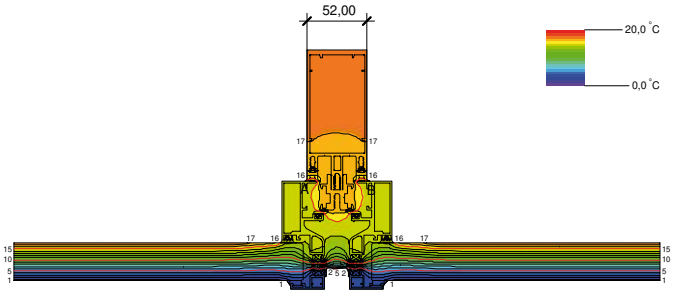

* Consult dimensions and glass.

07 / GLAZING

POSSIBILITY FROM 4 TO 64 mm

The **glazing capacity** of these systems covers from a single glazing thickness ranges of 4 mm and up to double glazing chambers **of 50 mm**.

This amplitude of space for large glazing thicknesses with **unbeatable energy and accoustic performances** allows us to achieve excellent results and features both in thermal efficiency as well as in acoustic insulation.

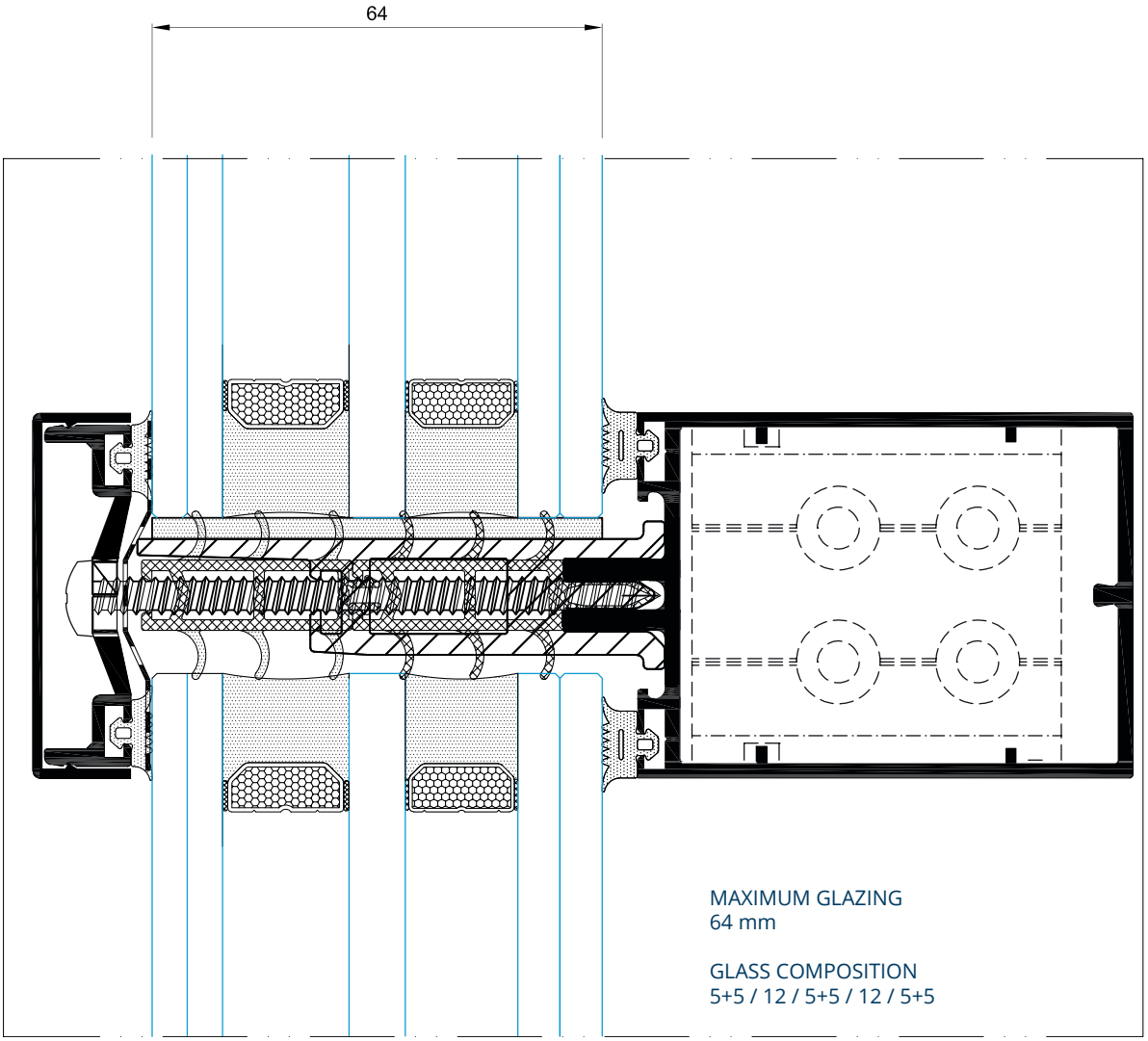

STANDARD GLAZING SUPPORTS

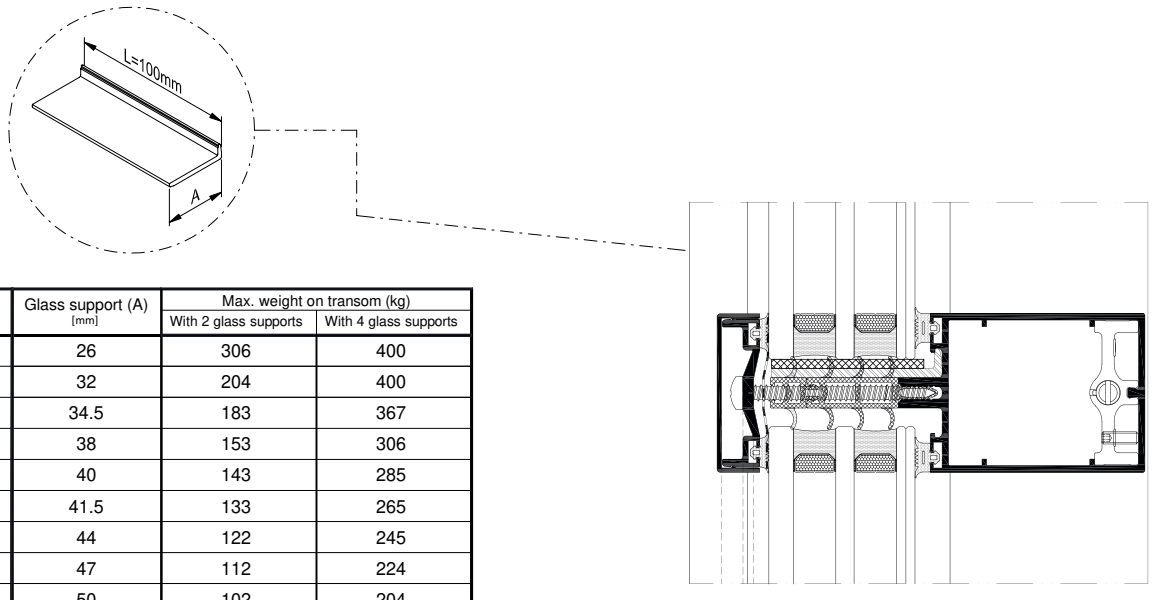

Reference	Glass support (A) [mm]	Max. weight on transom (kg)	
		With 2 glass supports	With 4 glass supports
999035	26	306	400
999036	32	204	400
999037	34.5	183	367
999038	38	153	306
999039	40	143	285
999040	41.5	133	265
999041	44	122	245
999042	47	112	224
999043	50	102	204
999044	56	87	173

NOTE: 1 or 2 glass supports must be placed on each edge at L/10.

HEAVY LOAD GLAZING SUPPORTS

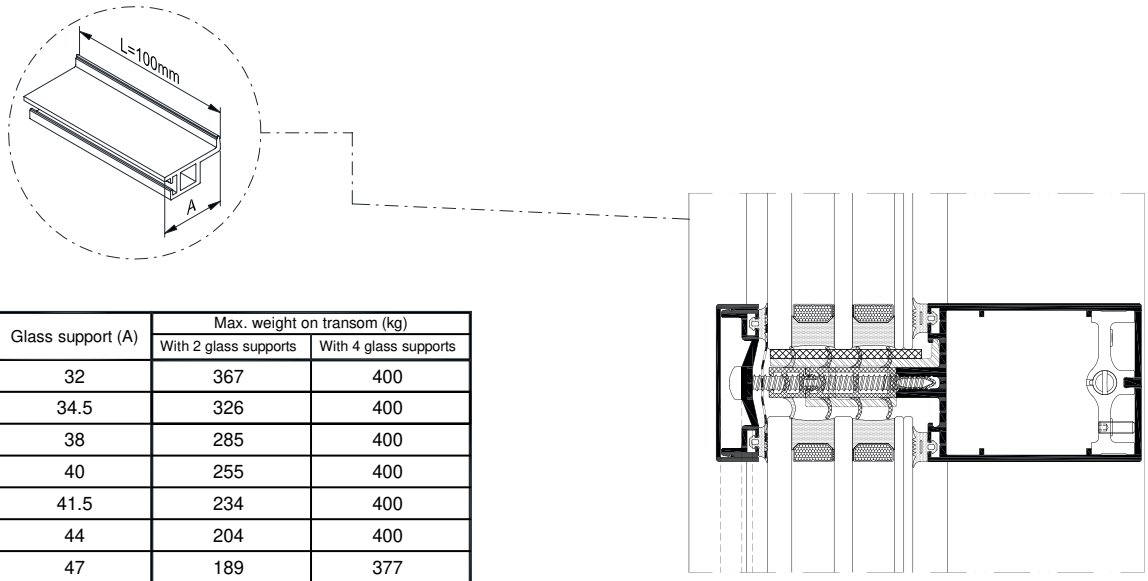

Reference	Glass support (A)	Max. weight on transom (kg)	
		With 2 glass supports	With 4 glass supports
999047	32	367	400
999048	34.5	326	400
999049	38	285	400
999050	40	255	400
999051	41.5	234	400
999052	44	204	400
999053	47	189	377
999054	50	173	347
999055	56	153	306

NOTE: 1 or 2 glass supports must be placed on each edge at L/10.

CROSS GLAZING SUPPORT FOR HEAVY LOADS

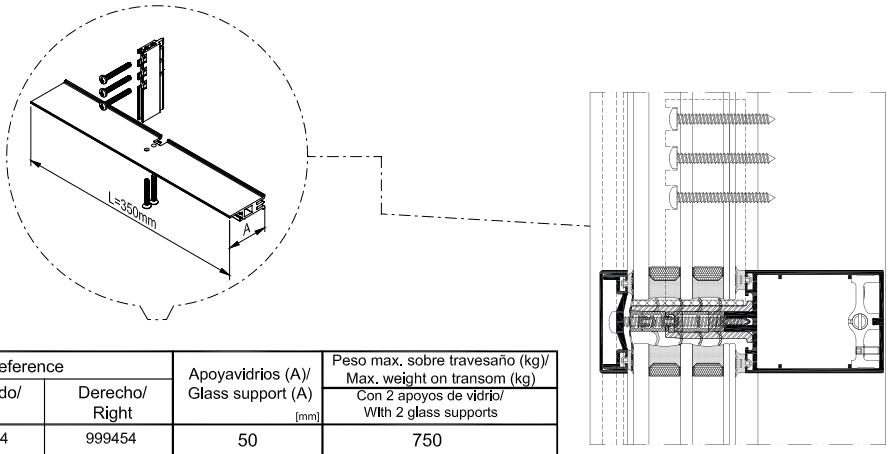

Referencia/ Reference			Apoyavidrios (A)/ Glass support (A) [mm]	Peso max. sobre travesaño (kg)/ Max. weight on transom (kg) Con 2 apoyos de vidrio/ WIth 2 glass supports
Central/ Central	Izquierdo/ Left	Derecho/ Right		
999154	999354	999454	50	750
999162	999362	999462	52	750
999155	999355	999455	56	750
999163	999363	999463	58	750
999156	999356	999456	62	750
999166	999366	999466	64	750
999167	999367	999467	67	750
999168	999368	999468	71	750
999169	999369	999469	75	750

GLASS SUPPORT FOR ST 52 FAÇADE

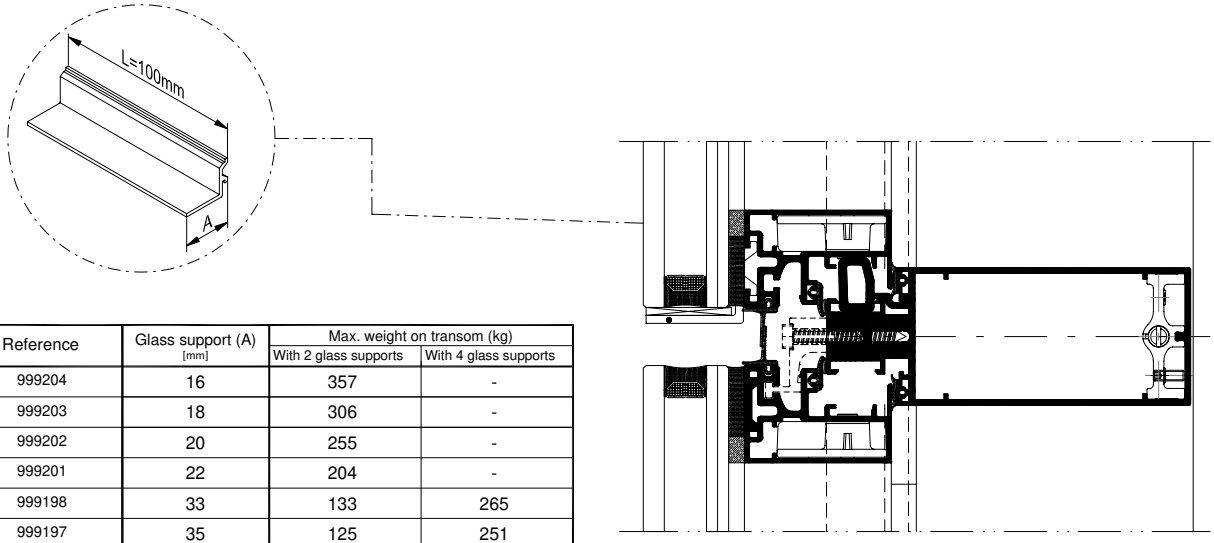

Reference	Glass support (A) [mm]	Max. weight on transom (kg)	
		With 2 glass supports	With 4 glass supports
999204	16	357	-
999203	18	306	-
999202	20	255	-
999201	22	204	-
999198	33	133	265
999197	35	125	251
999196	37	117	234
999195	39	110	220
999194	41	102	204
999193	43	95	190
999192	45	88	177
999191	47	82	163

NOTE: 1 or 2 glass supports must be placed on each edge at L/10.

08 / OPENINGS

TP 52 FACADE: HIDDEN PROJECTING OPENING

All of this façade systems range offers the **option of concealed projecting openings** that guarantees the **uniformity** of the external aesthetics.

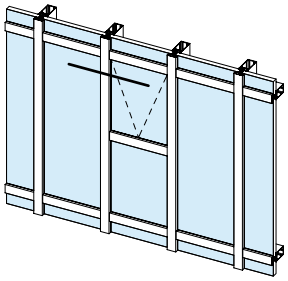

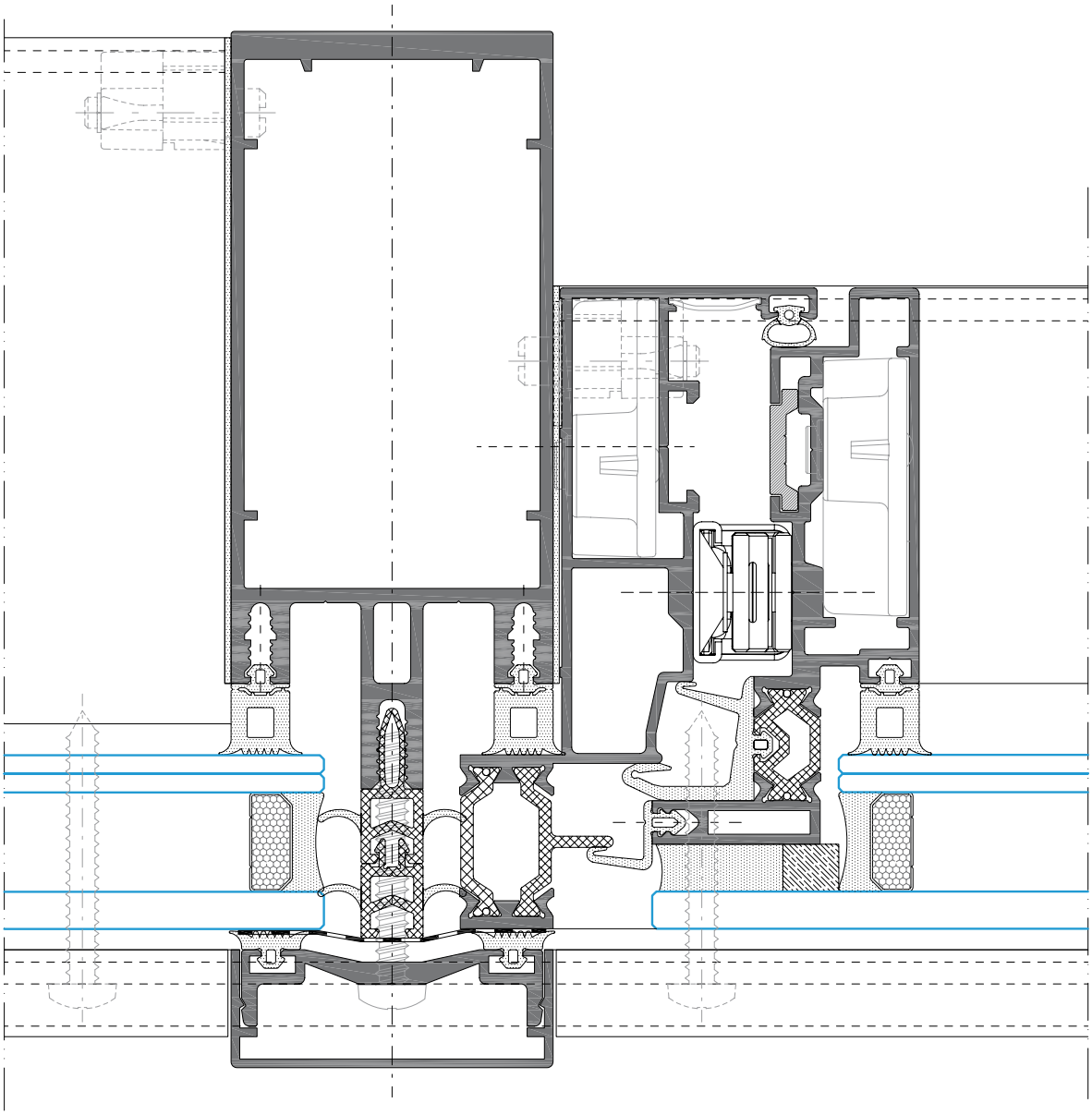

N/S

TP 52 FACADE: PARALLEL-OPENING

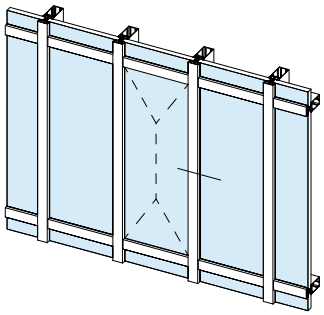

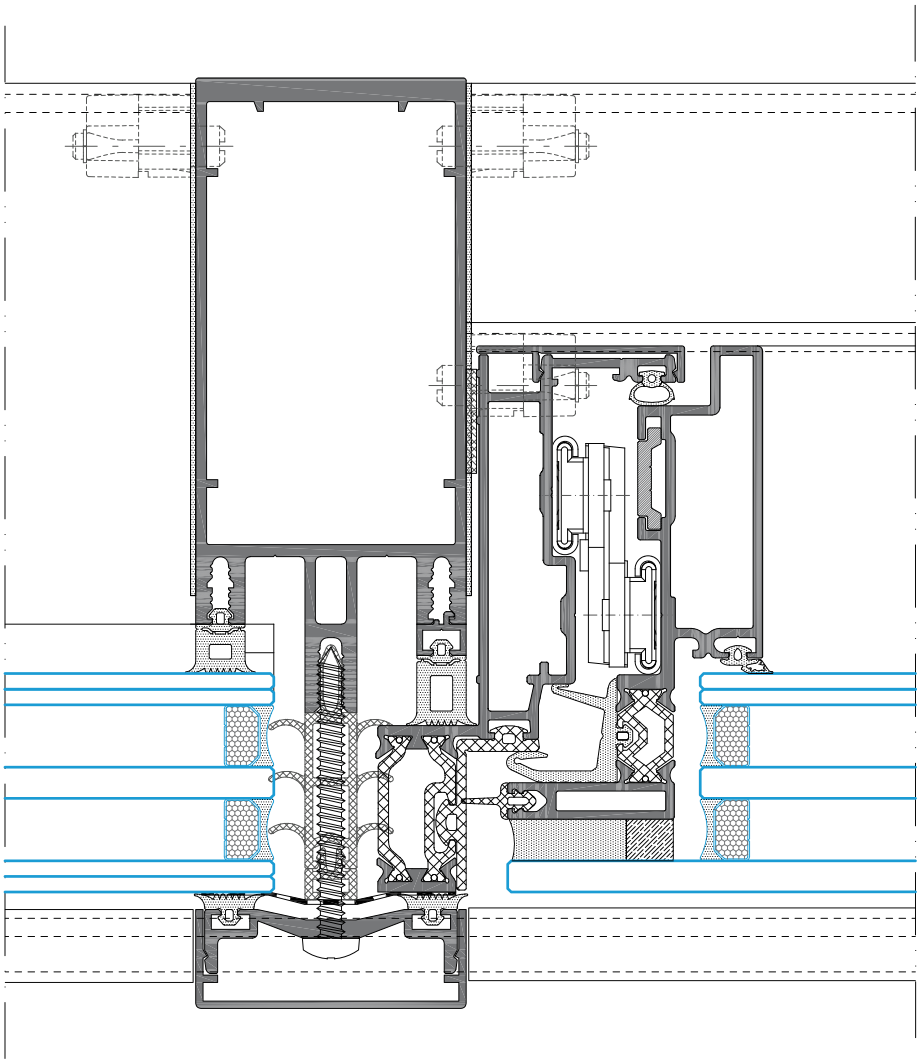

TP 52 FACADE: CONCEALED TILT & TURN OPENING

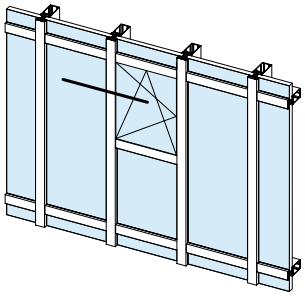

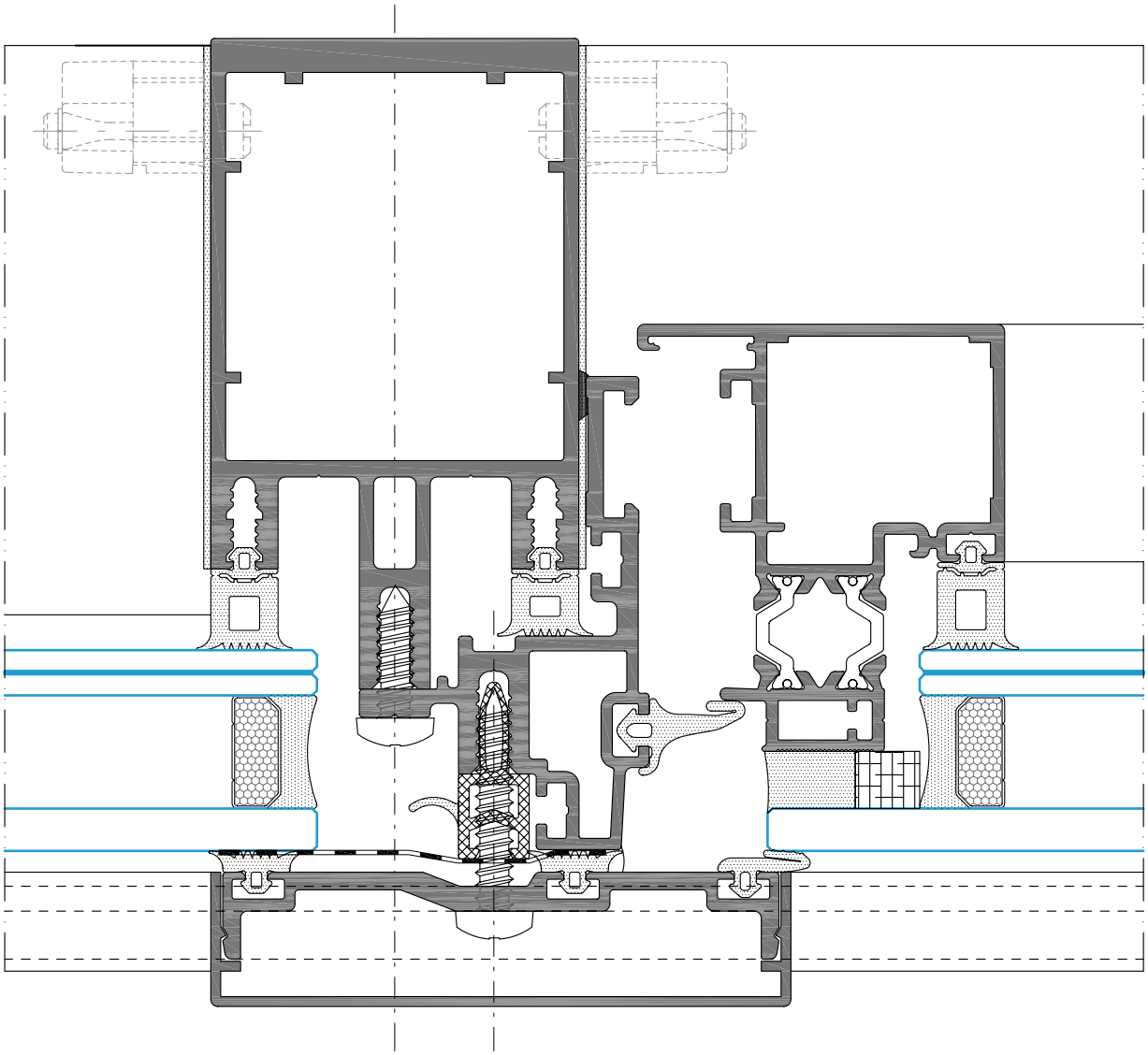

OPENING WITH INTEGRATED ALUMINIUM WINDOWS
TP 52 FACADE - COR 70 HIDDEN SASH

Additionally, it is possible **to integrate other types of window systems** such as hidden sash windows with minimal seen sections, door entrances or automatic doors.

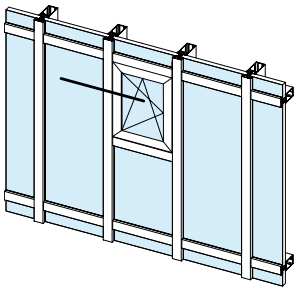

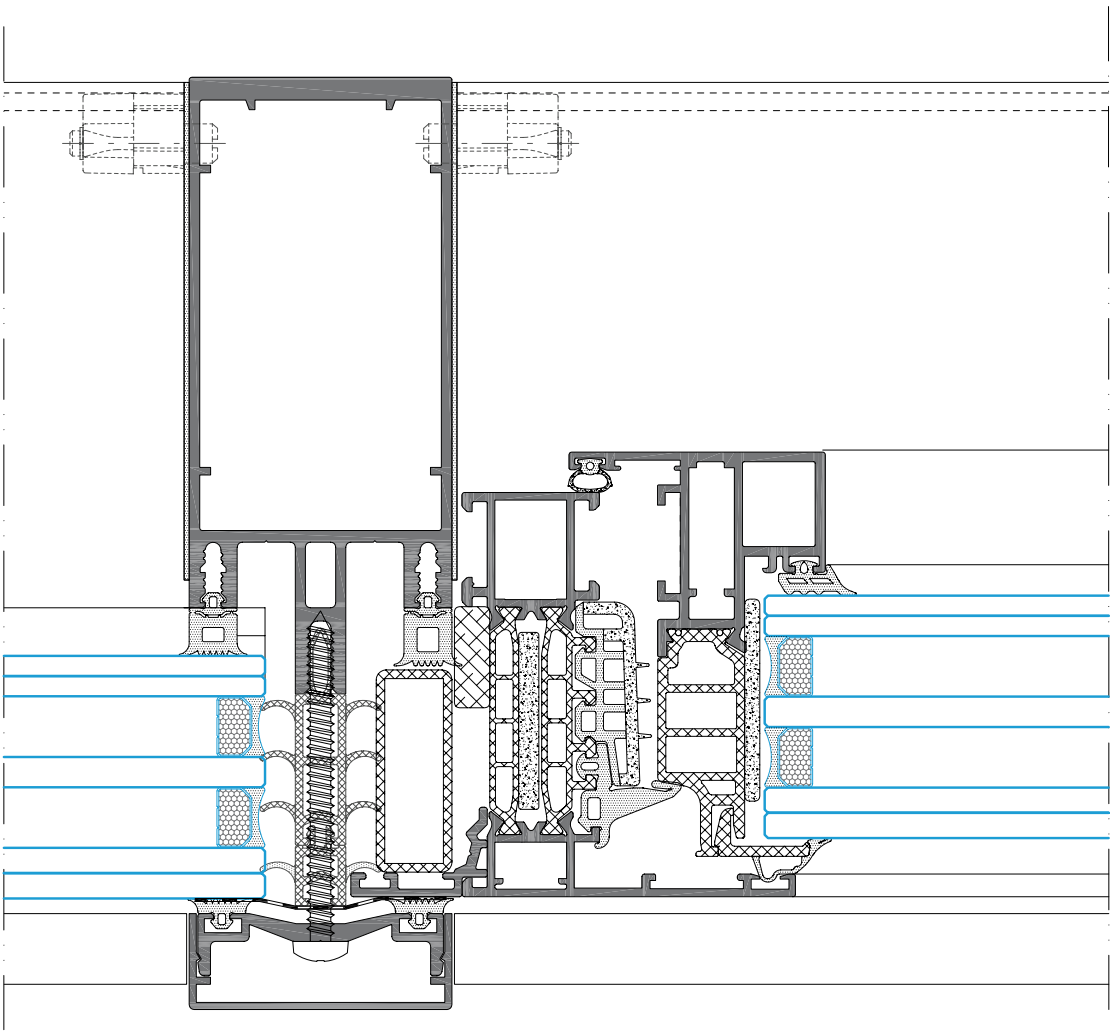

N/S

OPENING WITH INTEGRATED ALUMINIUM WINDOWS
TP 52 FACADE - MILLENNIUM PLUS DOOR

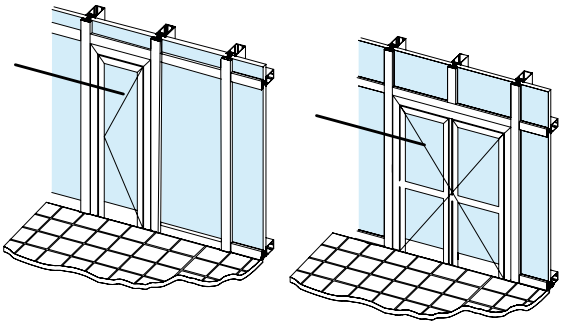

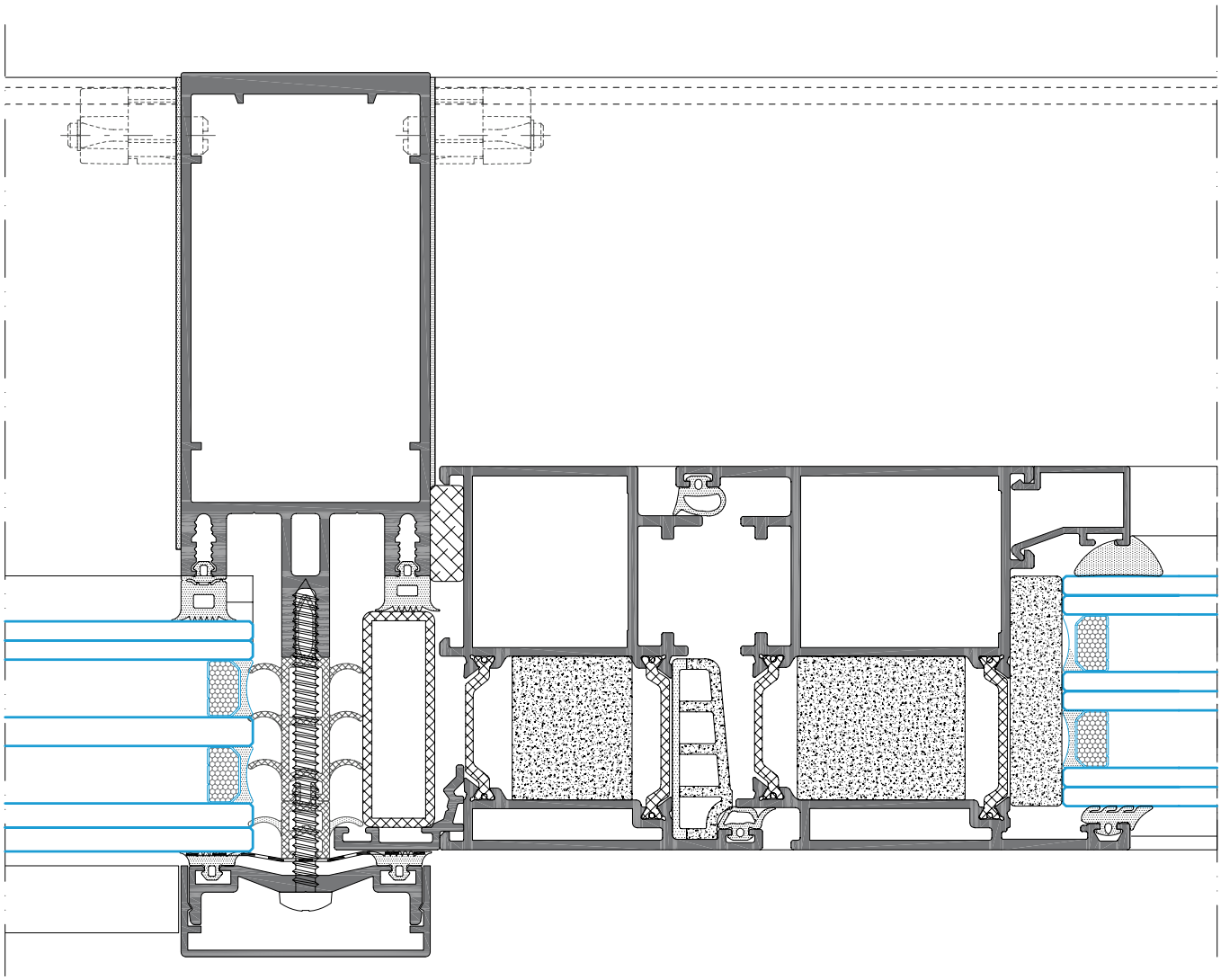

N/S

OPENING WITH INTEGRATED ALUMINIUM WINDOWS
TP 52 FACADE - MILLENNIUM 2000 AUTOMATIC DOOR

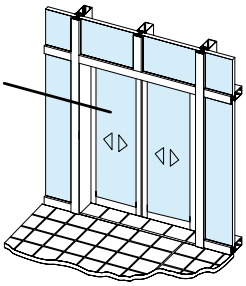

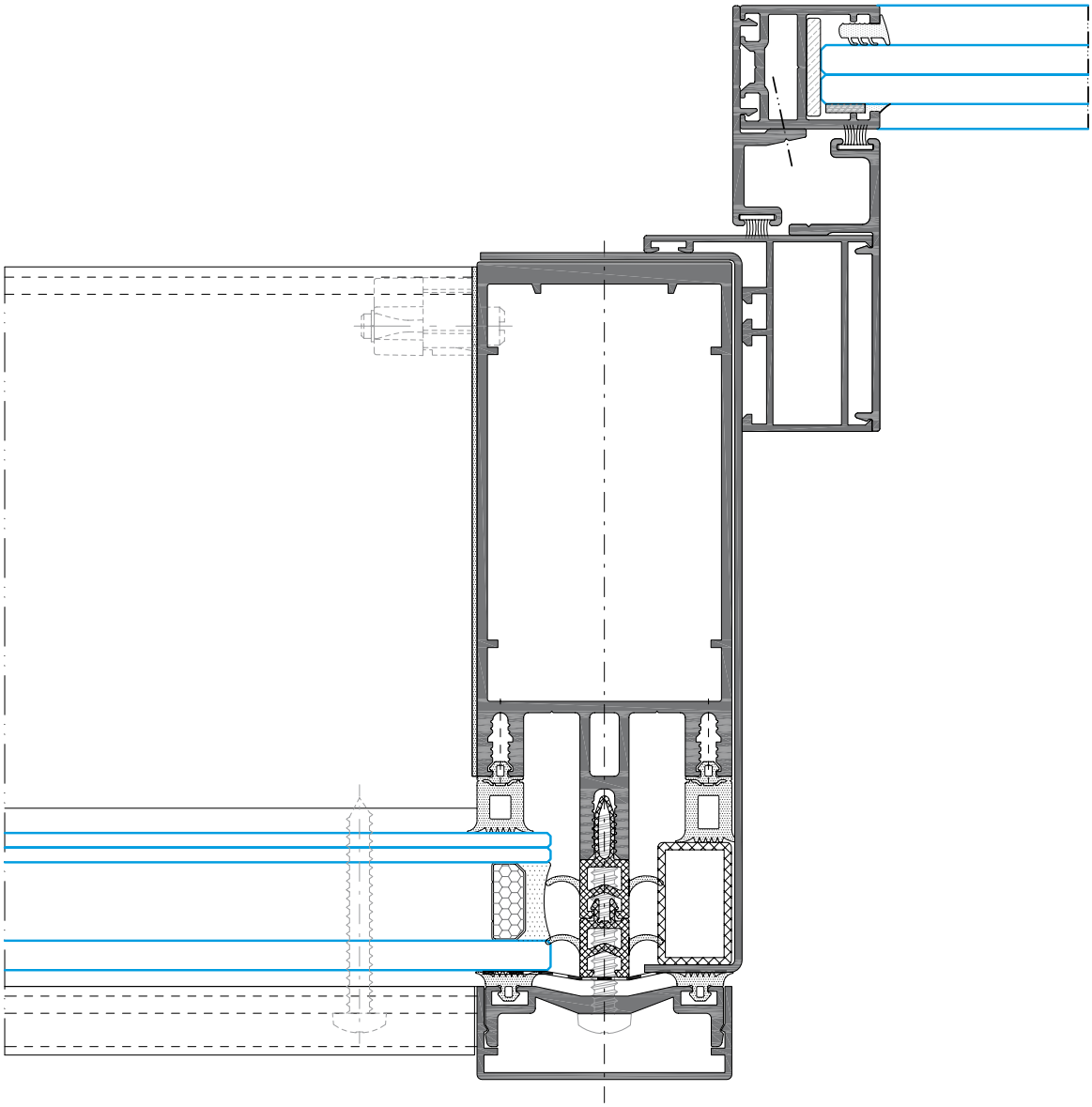

N/S

SG 52 FACADE: CONCEALED PROJECTING OPENING

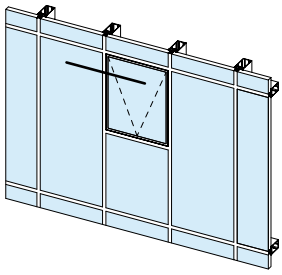

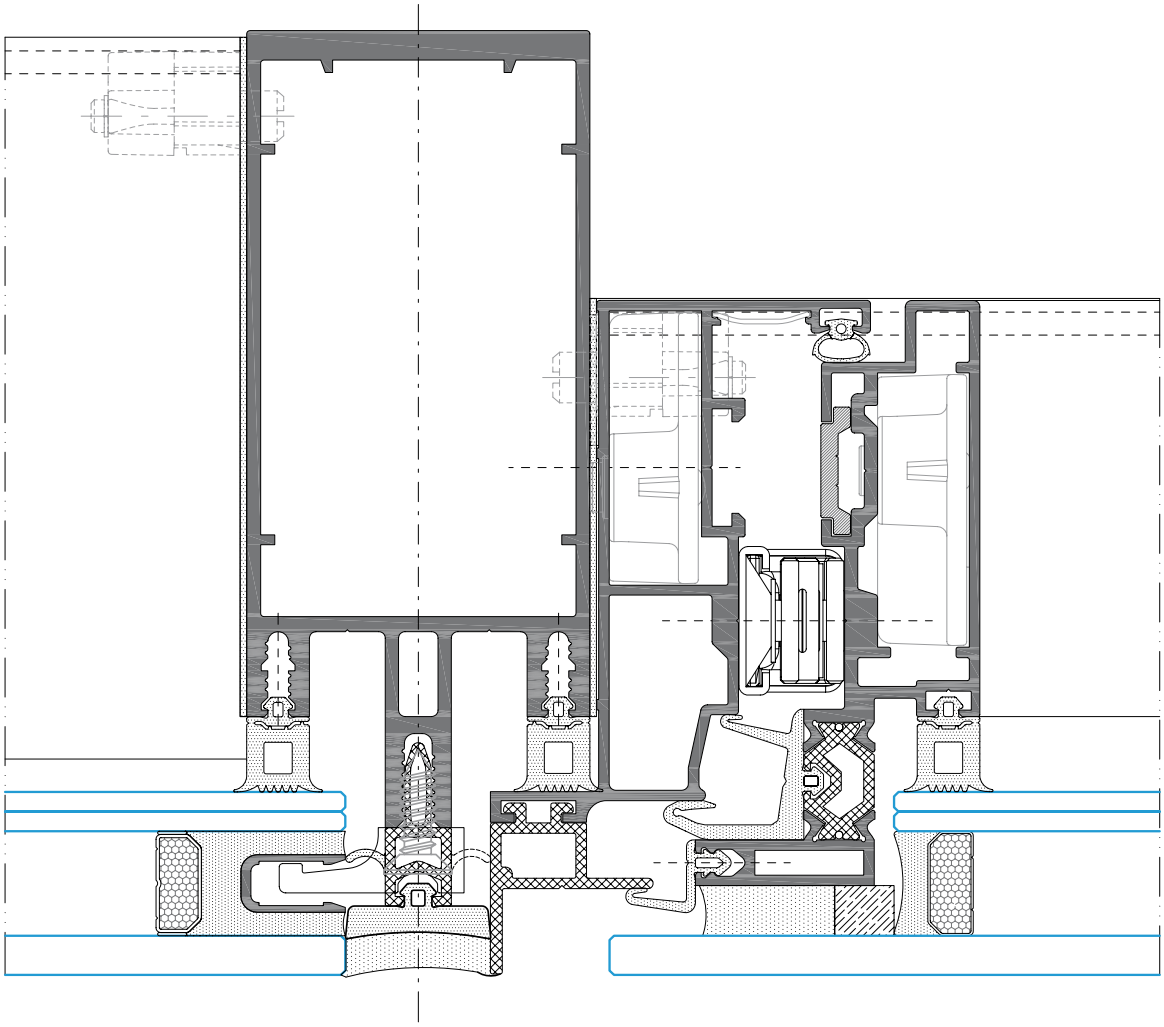

N/S

TPH 52 FACADE: CONCEALED PROJECTING OPENING

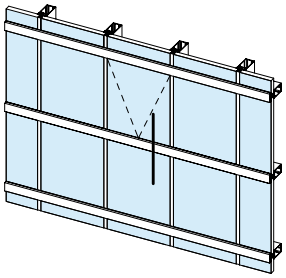

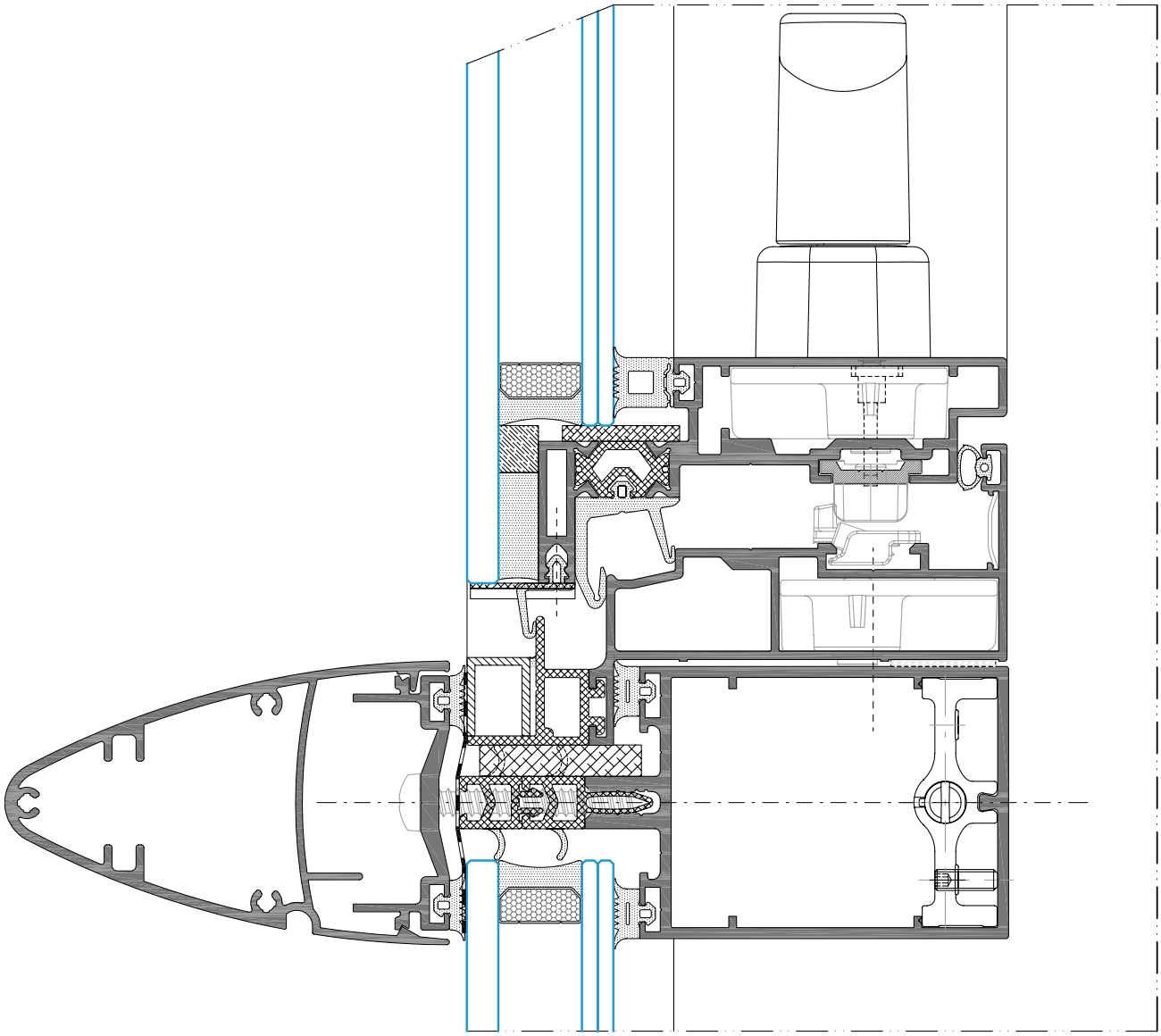

N/S

TPV 52 FACADE: CONCEALED PROJECTING OPENING

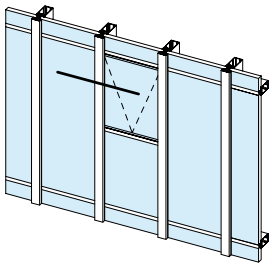

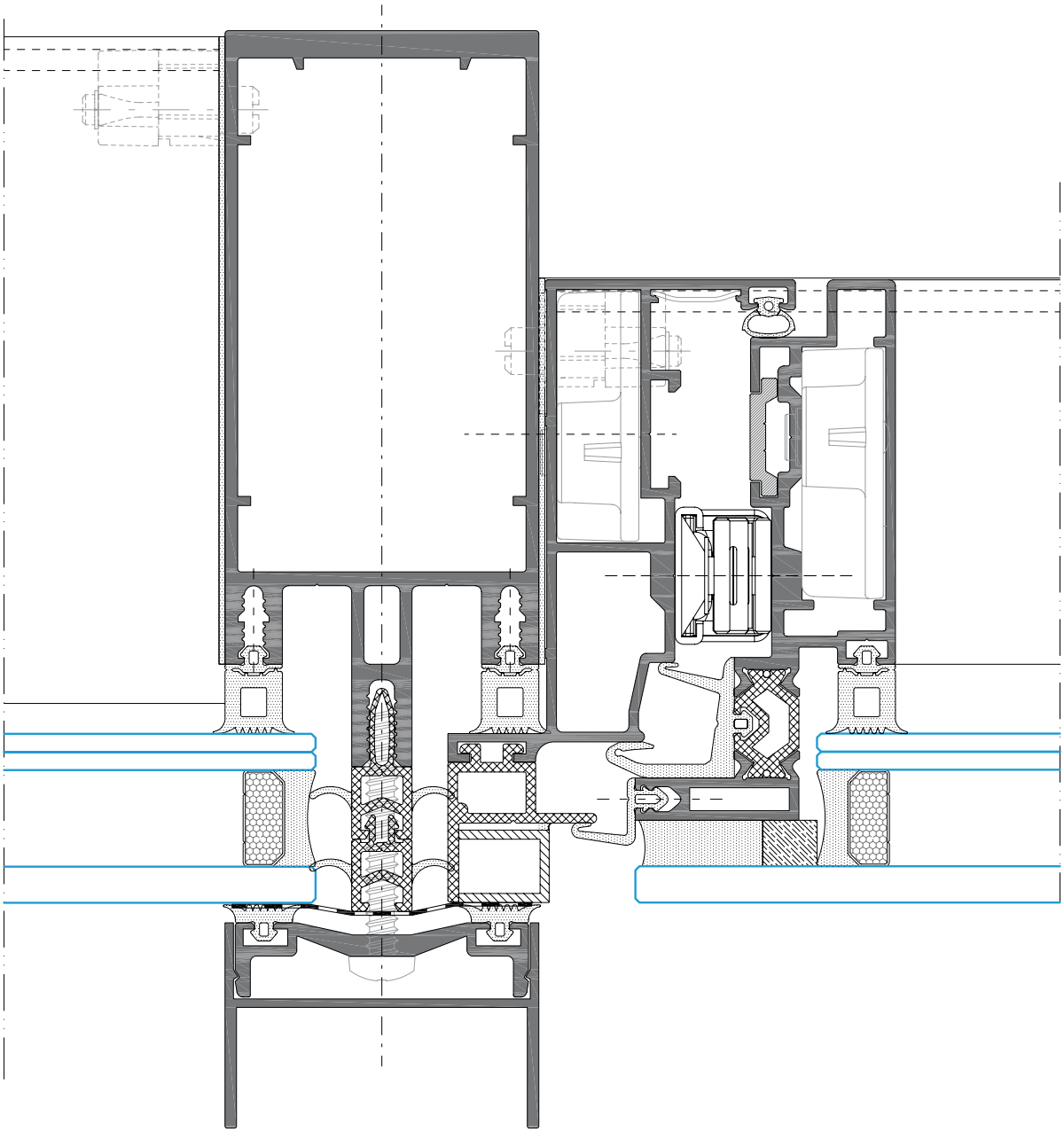

N/S

ST 52 FACADE: CONCEALED PROJECTING OPENING

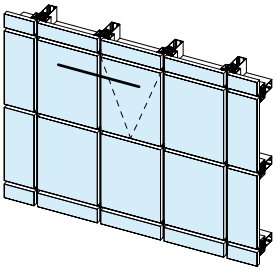

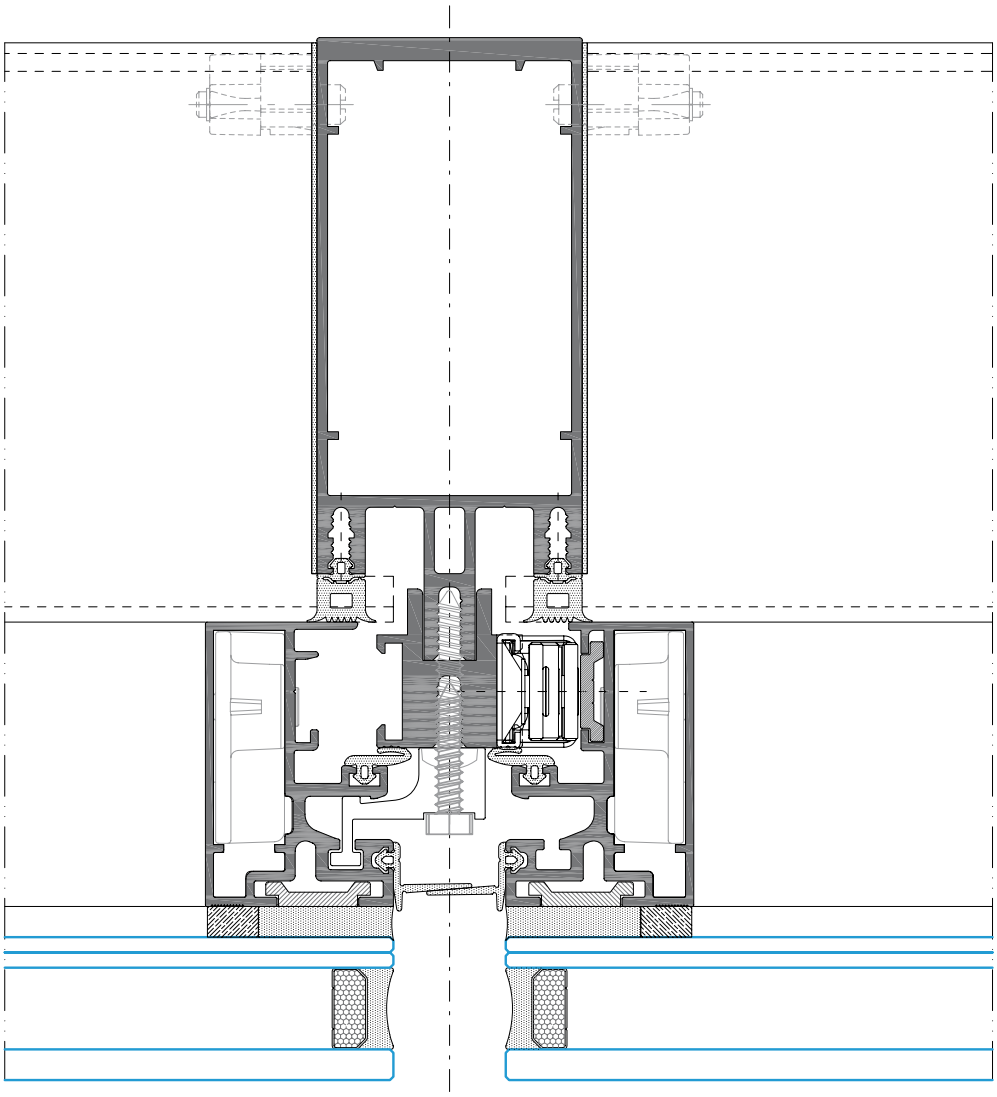

N/S

SST 52 FACADE: CONCEALED PROJECTING OPENING

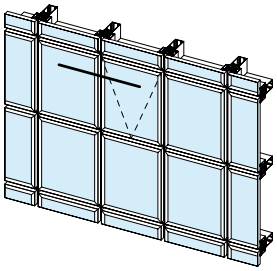

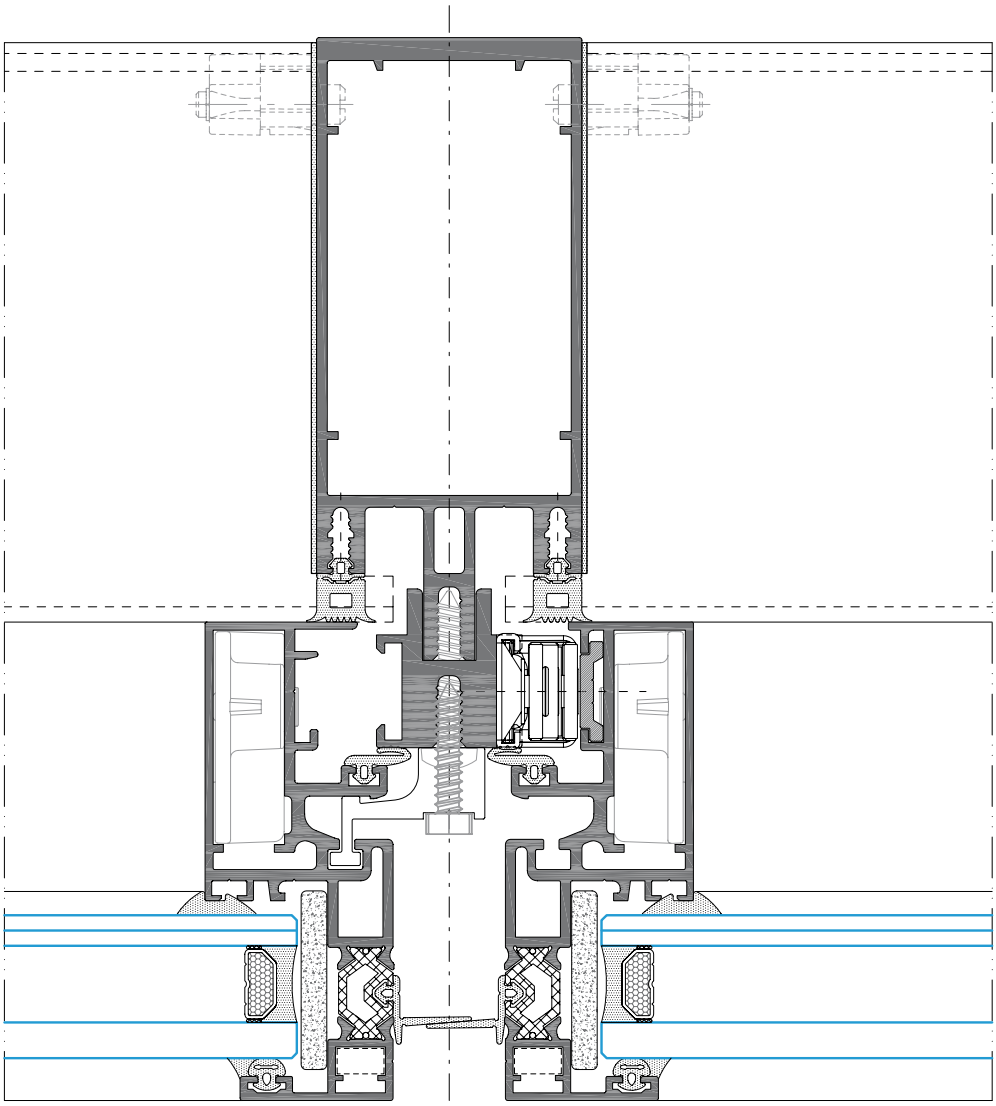

N/S

09 / STRUCTURAL ELEMENTS

BRACKET FOR INTEGRATING FIXED LOUVRES

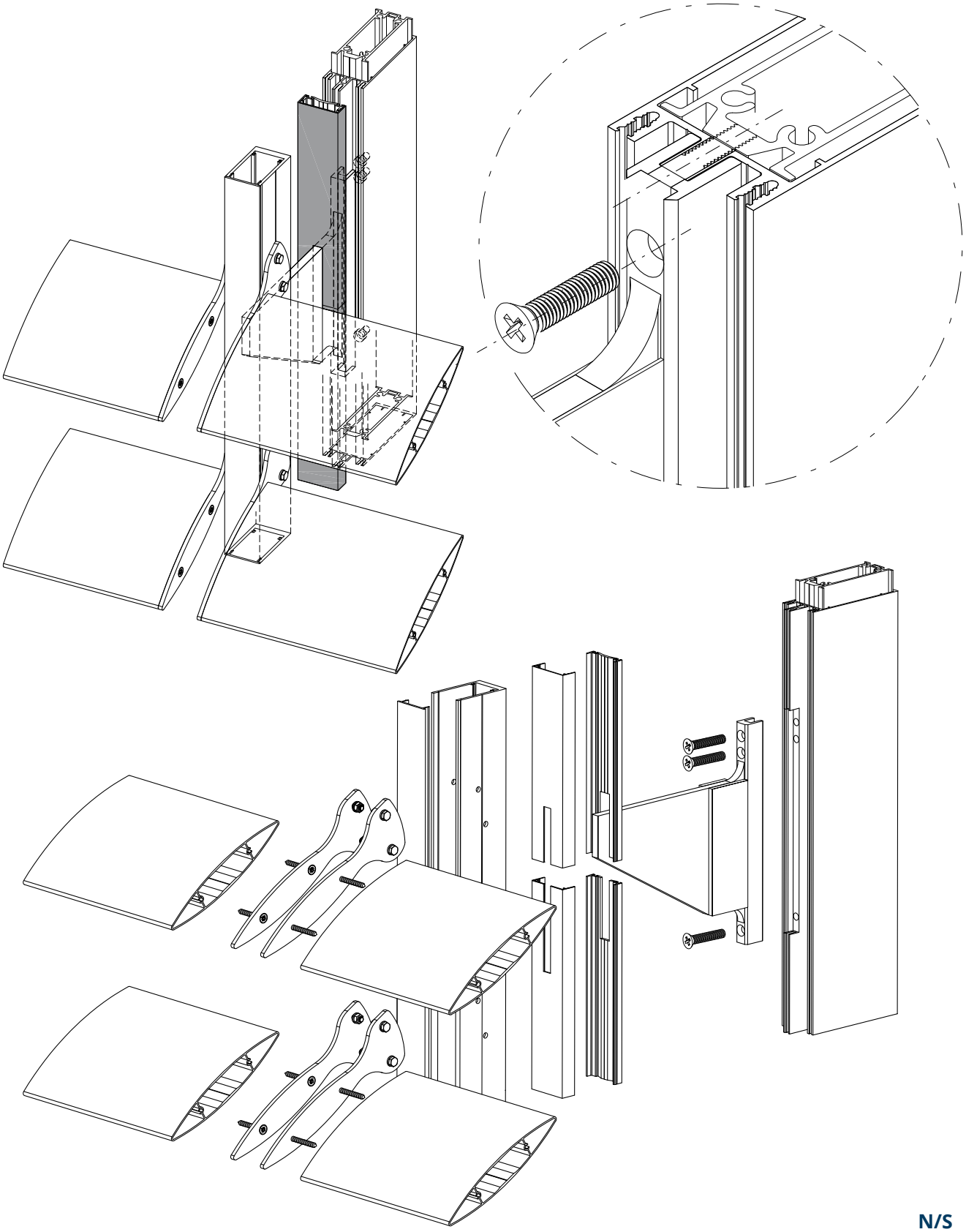

N/S

10 / FACADE SYSTEMS

TP 52 FACADE

This TP 52 façade is a traditional system, also known as the Stick system. **The fixing of the glazing to the supporting profiles is carried out by way of a continuous pressure profile** screwed externally to a screw port incorporated in the mullions and transoms. The glazing remains fixed at its 4 sides using this profile that is available with separating gaskets in order to impede contact between the glazing and the metal. **The pressure profile and the screws are covered by a continuous external embellishing profile known as a cover.**

The large Thermal Break, combined with its ample glazing capacity of up to 56 mm with glass compositions of large thicknesses and energy efficiency, presents to this new range of façades excellent thermal and accoustic performance features.

Its seen external section coincides with the interior, being 52 mm.

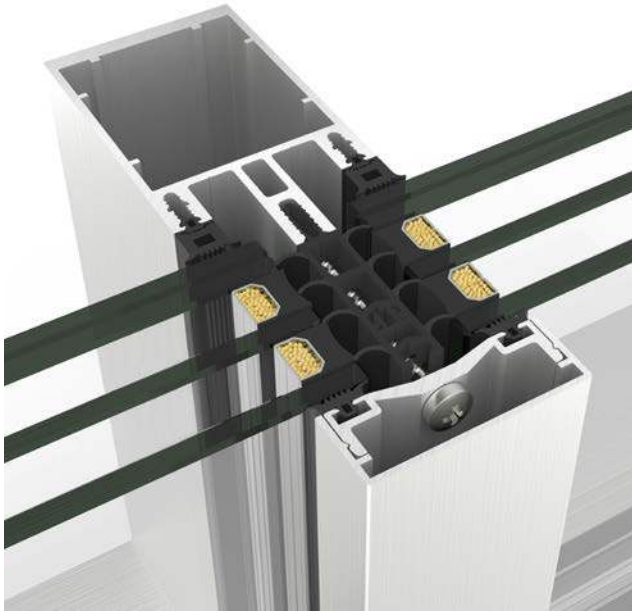

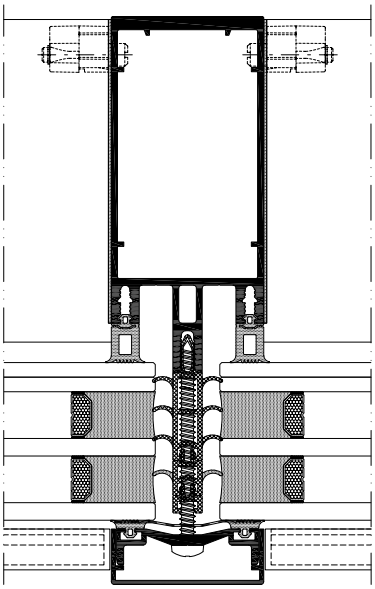

TRANSMITTANCE

U_{CW} from **0.6 (W/m²K)**

Consult dimensions and glass.

GLAZING

Maximum glazing: **64 mm**

Minimum glazing: **4 mm**

CATEGORIES ACHIEVED AT TEST CENTRE

Protection against atmospheric agents.

Air permeability (EN 12152:2000): **Class AE**

Water tightness (EN 12154:2000): **Class RE1350**

Wind resistance (EN 13116:2001): **APT**

(Design loading 2000 Pa - Security loading 3000 Pa)

Test reference 3.00 x 3.50 m.

SECTIONS	Mullion 52 mm Transom 52 mm
PROFILE THICKNESS	Mullion 2.1 & 3.0 mm Transom 2.1 mm
THERMAL BREAKING	Thermally broken profiles in 6, 12 & 30 mm stackables.
MAXIMUM WEIGHT	200 Kg (Parallel opening) 100 Kg (Concealed tilt and turn opening)

MAXIMUM / LOW DIMENSIONS

Max. Width (L) = 2,500 mm Max. Height (H) = 2,500 mm	Min. Width (L) = 500 mm Min. Height (H) = 650 mm
Hidden projecting opening.	
Max. Width (L) = 1,500 mm Max. Height (H) = 3,000 mm	Min. Width (L) = 450 mm Min. Height (H) = 650 mm
Parallel opening.	
Max. Width (L) = 1,400 mm Max. Height (H) = 1,900 mm	Min. Width (L) = 500 mm Min. Height (H) = 600 mm
Tilt and turn opening.	

OPENING POSSIBILITIES

Hidden projecting opening.
Parallel opening.
Concealed tilt and turn opening.

COVERS

85 mm deep elliptical cover.

H shape cover, 34 mm deep.

Rectangular cover: 14, 19 100 & 145 mm deep.

Pyramid shape cover, 155 mm deep.

CWCT British Standard.

SG 52 FACADE

This SG 52 façade is a traditional system, also known as the Stick system. **The fixing of the glazing to the supporting profiles is carried out by using clips. This system requires an insert that is fitted in to the glazing chamber (U profile)**. The combination of the clip and the insert allows the glass to fastened on all four sides.

The large Thermal Break, combined with its ample glazing capacity of up to 50 mm with glass compositions of large thicknesses and energy efficiency, presents to this new range of facades excellent thermal and accoustic performance features.

It has a “glass only” style on the exterior.

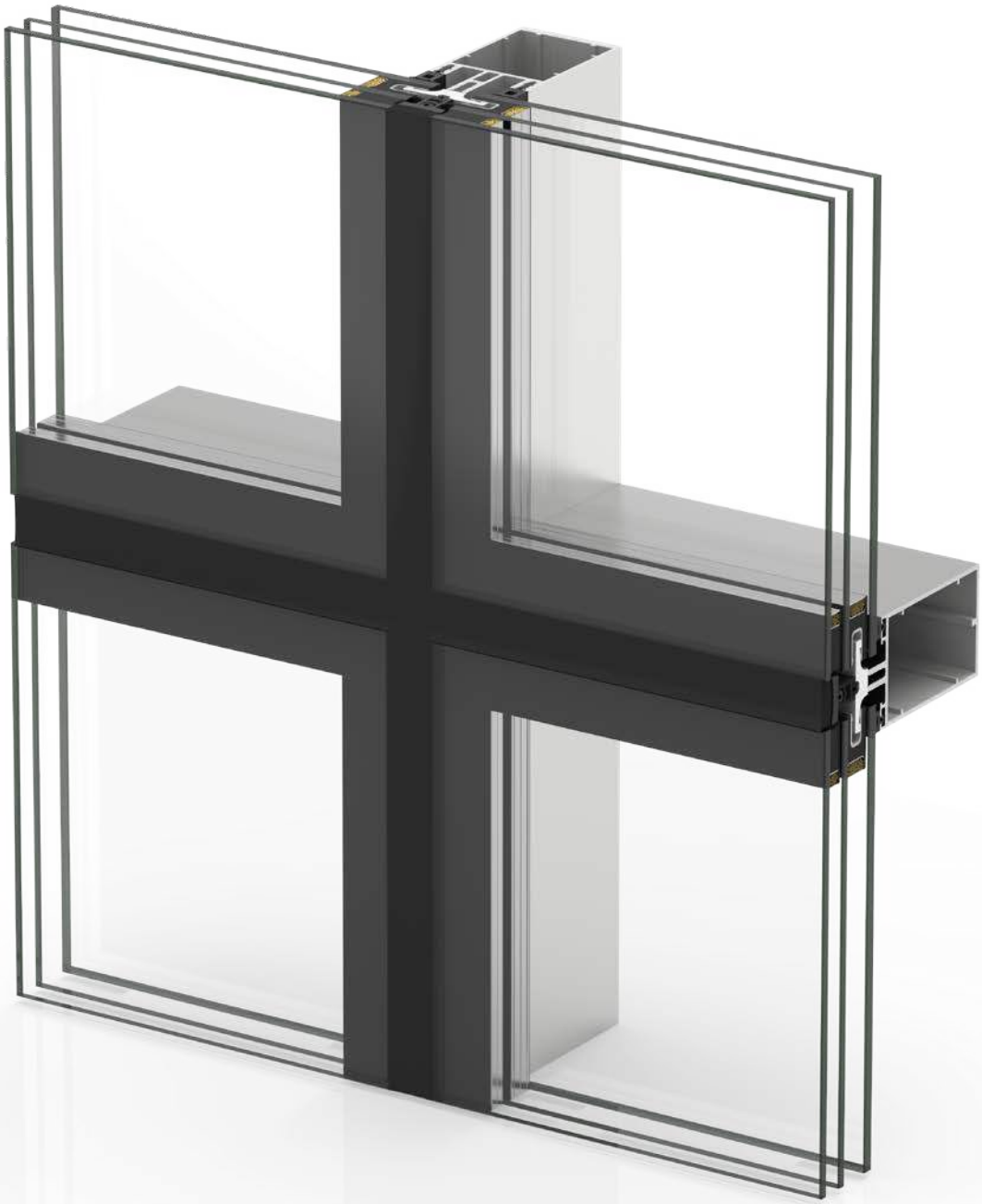

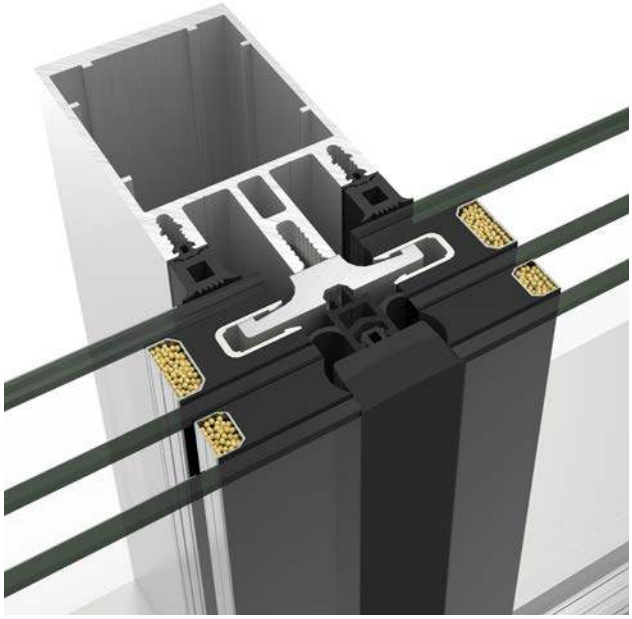

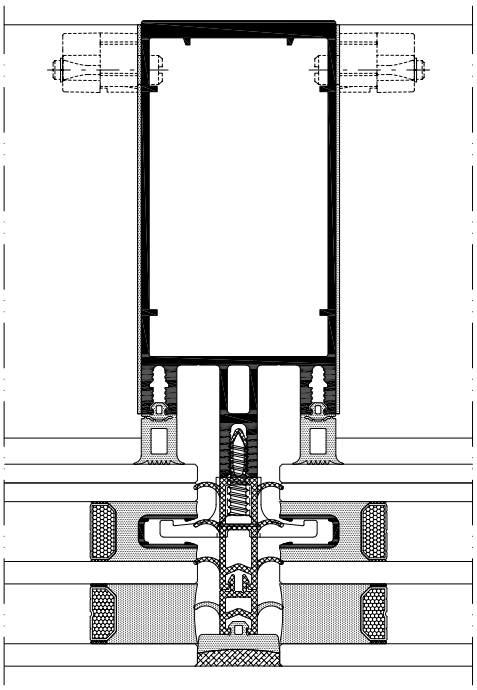

TRANSMITTANCE

U_{CW} from **0.6 (W/m²K)**

Consult dimensions and glass.

GLAZING

Maximum glazing: **64 mm**

Minimum glazing: **6 mm**

CATEGORIES ACHIEVED AT TEST CENTRE

Protection against atmospheric agents.

Air permeability (EN 12152:2000): **Class AE**

Water tightness (EN 12154:2000): **Class RE1500**

Wind resistance (EN 13116:2001): **APT**

(Design loading 2000 Pa - Security loading 3000 Pa)

Test reference 3.00 x 3.50 m.

SECTIONS	Mullion 52 mm Transom 52 mm
PROFILE THICKNESS	Mullion 2.1 & 3.0 mm Transom 2.1 mm
THERMAL BREAKING	Thermally broken profiles in 6, 12 & 30 mm stackables.
MAXIMUM WEIGHT	180 Kg

MAXIMUM / LOW DIMENSIONS

Max. Width (L) = 2,500 mm Max. Height (H) = 2,500 mm	Min. Width (L) = 500 mm Min. Height (H) = 650 mm

Hidden projecting opening.

OPENING POSSIBILITIES

Hidden projecting opening.

CWCT British Standard.

EQUITY FACADE

With a **seen internal section of only 18 mm**, both with the mullion as well as the transom, this new façade system presents a minimalist style and slenderness allowing a total entry of light to the interior of the building.

The mullion and transom profiles equalize its depth giving rise to a **flush assembly** that provides uniformity to the internal style of the façade.

The large Thermal Break, combined with its ample glazing capacity of up to 56 mm with glass compositions of large thicknesses and energy efficiency, presents to this new range of façades excellent thermal and accoustic performance features.

The combination of mullions and transoms is suitable for the following facade sytems: TP 52, SG 52, TPH 52, TPV 52, ST 52 and SST 52.

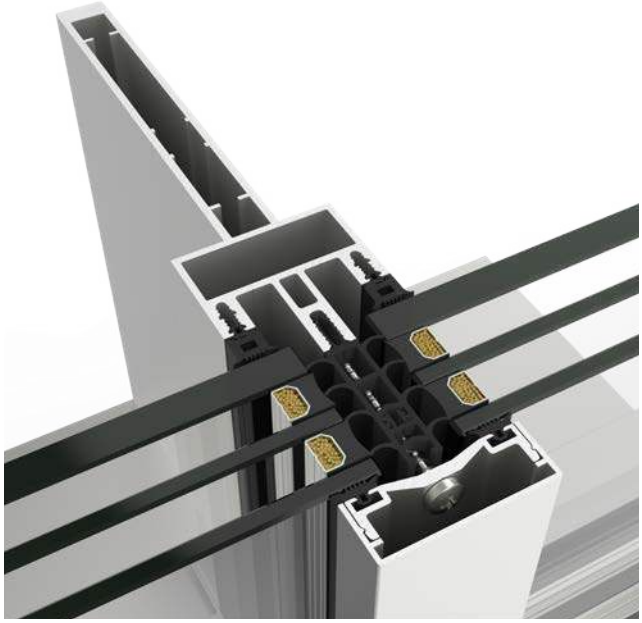

TRANSMITTANCE
U_{cw} from **0.6 (W/m²K)**
Consult dimensions and glass.

GLAZING
Maximum glazing: **64 mm**
Minimum glazing: **4 mm**

SECTIONS	Mullion 18 mm Transom 18 mm
PROFILE THICKNESS	Mullion 2.6 mm Transom 2.6 mm
THERMAL BREAKING	Thermally broken profiles in 6, 12 & 30 mm stackables.

COVERS
85 mm deep elliptical cover.
H shape cover, 34 mm deep.
Rectangular cover: 14, 19 100 & 145 mm deep.
Pyramid shape cover, 155 mm deep.

CWCT British Standard.

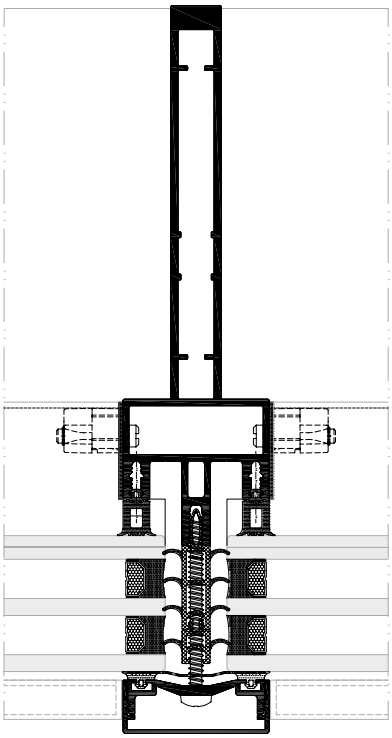

TPH 52 FACADE

This TPH 52 façade is a mixed system that evolved from the combination of the TP 52 and the SG 52 systems. It maintains the **pairing of the pressure cover on the horizontal gaskets** highlighting the line in this direction whilst **the glazing fixing is achieved by way of clips and the U profile on its vertical edge**.

The large Thermal Break, combined with its ample glazing capacity of up to 44 mm with glass compositions of large thicknesses and energy efficiency, presents to this new range of façades excellent thermal and accoustic performance features.

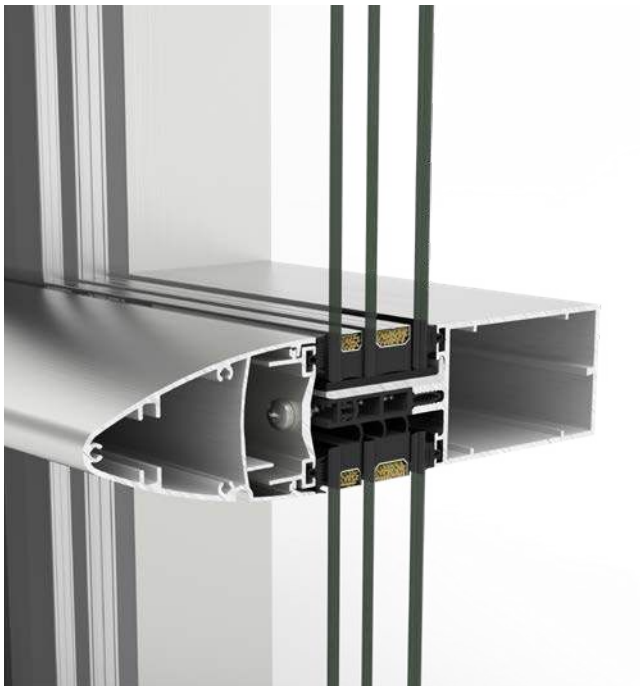

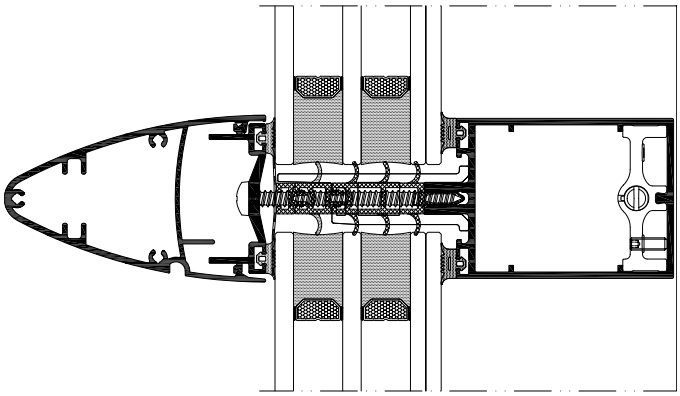

TRANSMITTANCE

U_{CW} from **0.6 (W/m²K)**

Consult dimensions and glass.

GLAZING

Maximum glazing: **64 mm**

Minimum glazing: **6 mm**

CATEGORIES ACHIEVED AT TEST CENTRE

Protection against atmospheric agents.

Air permeability (EN 12152:2000): **Class AE**

Water tightness (EN 12154:2000): **Class RE1500**

Wind resistance (EN 13116:2001): **APT**

(Design loading 2000 Pa - Security loading 3000 Pa)

Test reference 3.00 x 3.50 m.

SECTIONS	Mullion 52 mm Transom 52 mm
PROFILE THICKNESS	Mullion 2.1 & 3.0 mm Transom 2.1 mm
THERMAL BREAKING	Thermally broken profiles in 6, 12 & 30 mm stackables.
MAXIMUM WEIGHT	180 Kg (Projecting opening)

MAXIMUM / LOW DIMENSIONS

Max. Width (L) = 2,500 mm Max. Height (H) = 2,500 mm	Min. Width (L) = 500 mm Min. Height (H) = 650 mm

Hidden projecting opening.

OPENING POSSIBILITIES

Hidden projecting opening.

COVERS

85 mm deep elliptical cover.

H shape cover, 34 mm deep.

Rectangular cover: 14, 19 100 & 145 mm deep.

CWCT British Standard.

TPV 52 FACADE

This TPV 52 façade is a mixed system that evolved from the combination of the TP 52 and the SG 52 systems. It maintains the **pairing of the pressure cover on the horizontal gaskets** highlighting the line in this direction whilst **the glazing fixing is achieved by way of clips and the U profile on its vertical edge**.

The large Thermal Break, combined with its ample glazing capacity of up to 44 mm with glass compositions of large thicknesses and energy efficiency, presents to this new range of façades excellent thermal and accoustic performance features.

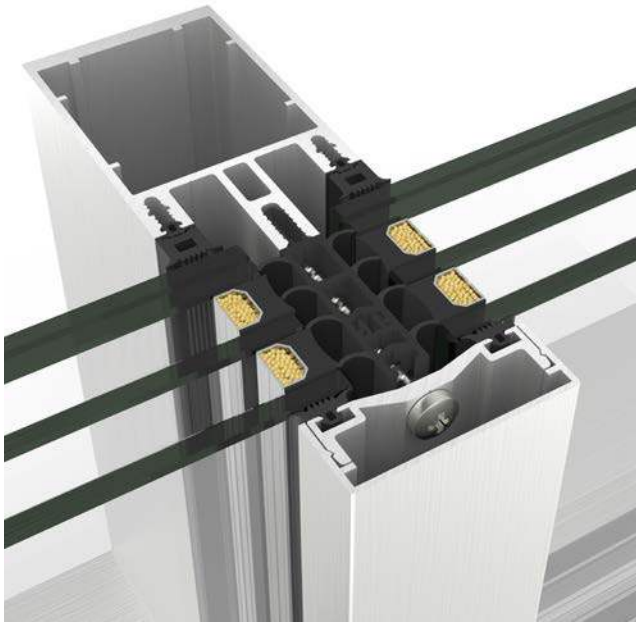

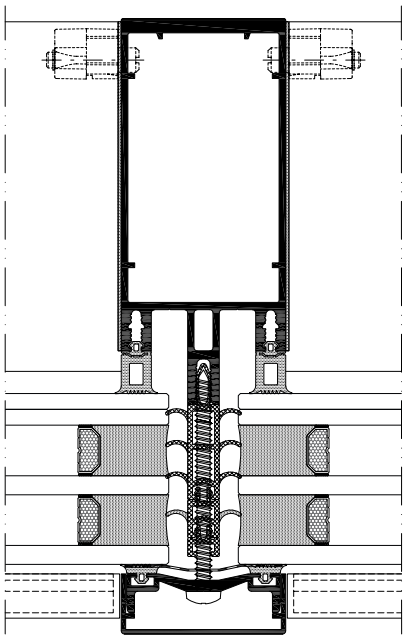

TRANSMITTANCE

U_{CW} from **0.6 (W/m²K)**

Consult dimensions and glass.

GLAZING

Maximum glazing: **64 mm**

Minimum glazing: **6 mm**

CATEGORIES ACHIEVED AT TEST CENTRE

Protection against atmospheric agents.

Air permeability (EN 12152:2000): **Class AE**

Water tightness (EN 12154:2000): **Class RE1500**

Wind resistance (EN 13116:2001): **APT**

(Design loading 2000 Pa - Security loading 3000 Pa)

Test reference 3.00 x 3.50 m.

SECTIONS	Mullion 52 mm Transom 52 mm
PROFILE THICKNESS	Mullion 2.1 & 3.0 mm Transom 2.1 mm
THERMAL BREAKING	Thermally broken profiles in 6, 12 & 30 mm stackables.
MAXIMUM WEIGHT	180 Kg (Projecting opening)

MAXIMUM / LOW DIMENSIONS

Max. Width (L) = 2,500 mm Max. Height (H) = 2,500 mm	Min. Width (L) = 500 mm Min. Height (H) = 650 mm

Hidden projecting opening.

OPENING POSSIBILITIES

Hidden projecting opening.

COVERS

H shape cover, 34 mm deep.

Rectangular cover: 14, 19, 100 & 145 mm deep.

Pyramid shape cover, 155 mm deep.

CWCT British Standard.

ST 52 FACADE

With this ST 52 façade the glass is glued to an aluminium frame using structural silicone. The fixing of the glass-frame set to the supporting profiles **is done by using the system's clips**.

The style characteristic of this system is to offer the **same aspect, whether with fixed glazing or with practicables, both in the exterior as in the interior**.

Its glass only external style is with an open groove and the first weather barrier being an EPDM gasket which is installed around the perimeter of each module. An overlap closes the space between the gaskets.

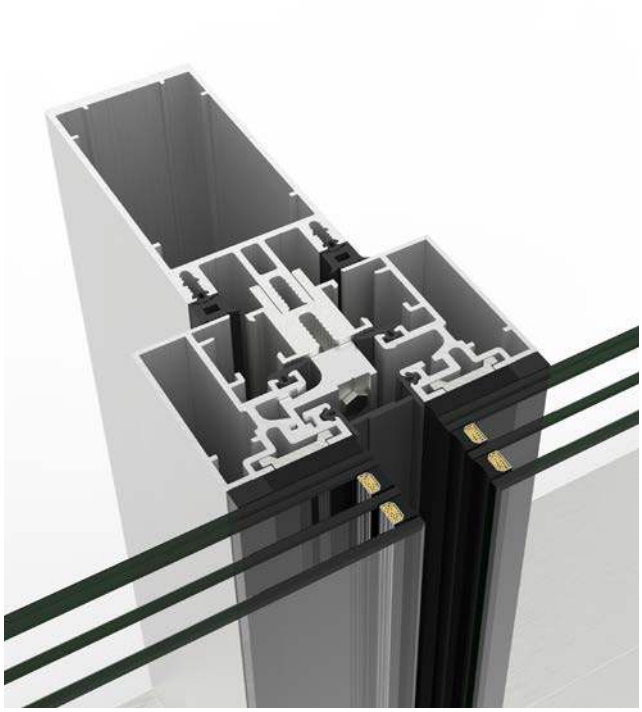

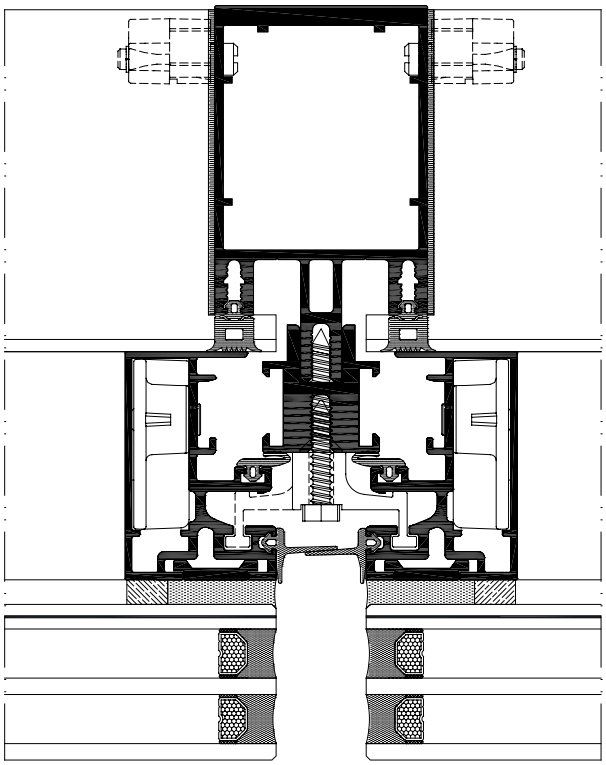

TRANSMITTANCE

U_{CW} from **0.7 (W/m²K)**

Consult dimensions and glass.

GLAZING

Maximum glazing: **38 mm**

Minimum glazing: **6 mm**

CATEGORIES ACHIEVED AT TEST CENTRE

Protection against atmospheric agents.

Air permeability (EN 12152:2000): **Class AE**

Water tightness (EN 12154:2000): **Class RE750**

Wind resistance (EN 13116:2001): **APT**

(Design loading 2000 Pa - Security loading 3000 Pa)

Test reference 3.00 x 3.50 m.

SECTIONS	Mullion 52 mm Transom 52 mm
PROFILE THICKNESS	Mullion 2.1 & 3.0 mm Transom 2.1 mm
MAXIMUM WEIGHT	180 Kg (Projecting opening)

MAXIMUM / LOW DIMENSIONS

Max. Width (L) = 2,500 mm Max. Height (H) = 2,500 mm	Min. Width (L) = 500 mm Min. Height (H) = 650 mm

Hidden projecting opening.

OPENING POSSIBILITIES

Hidden projecting opening.

SST 52 FACADE

With this SST 52 façade, the glass is mechanically fixed to a perimetral frame and thanks to the existence of an external trim that ensures the stability of the glazing, **there is no need for a chemical fixing** with structural silicone which is needed with the ST 52 system. **The fixing of the glass-frame set to the supporting profiles is done by using the system's clips.**

Its external aspect is that of an open channel with an aluminium surrounding around the glass and the first weather barrier being an EPDM gasket which is installed around the perimeter of each module.

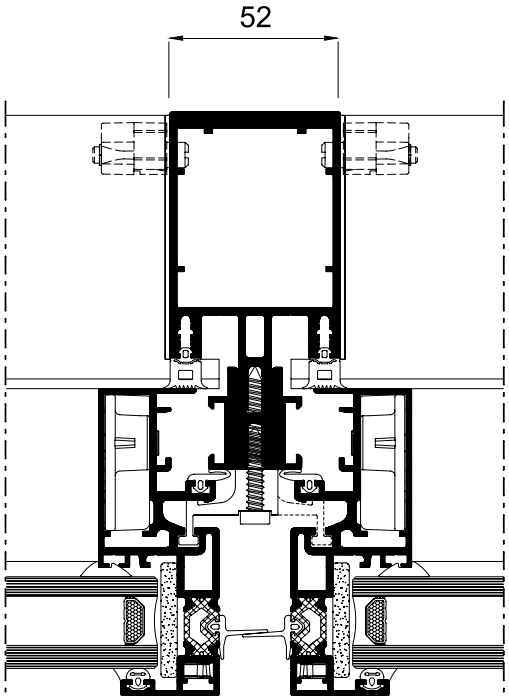

TRANSMITTANCE

U_{CW} from **0.8 (W/m²K)**

Consult dimensions and glass.

GLAZING

Maximum glazing: **28 mm**

Minimum glazing: **6 mm**

CATEGORIES ACHIEVED AT TEST CENTRE

Protection against atmospheric agents.

Air permeability (EN 12152:2000): **Class AE**

Water tightness (EN 12154:2000): **Class RE750**

Wind resistance (EN 13116:2001): **APT**

(Design loading 1200 Pa - Security loading 1800 Pa)

Test reference 3.00 x 3.50 m.

SECTIONS	Mullion 52 mm Transom 52 mm
PROFILE THICKNESS	Mullion 2.1 & 3.0 mm Transom 2.1 mm
THERMAL BREAKING	18 mm
MAXIMUM WEIGHT	180 Kg (Projecting opening)

MAXIMUM / LOW DIMENSIONS

Max. Width (L) = 2,500 mm Max. Height (H) = 2,500 mm	Min. Width (L) = 500 mm Min. Height (H) = 650 mm

Hidden projecting opening.

OPENING POSSIBILITIES

Hidden projecting opening.

11 / SKYLIGHT - VERANDA

A new generation of skylights and verandas consisting of a standard system with an ample range of mullions and transoms that respond to the different aesthetic and constructive requirements for architectonic projects using integral solutions that allow for a gain in new spaces with great luminosity.

The standard profile range of mullions from 130 to 250 mm and transoms from 40.50 mm to 255.50 mm as well as the complementary accessories, are common to all of the CORTIZO range of new façades.

The thermally broken area combined with a great glazing capacity of up to 50 mm with glass compositions with large thicknesses as well as being energy efficient, presents to this new range of skylights, excellent thermal and accoustic features.

The profile designs with first, second and third level mullions and transoms, provides the possibility of different drainage levels that guarantee perfect drainage and ventilation and therefore ensuring total weather tightness.

The possibility of fabricating skylights, gabled or hipped and the integration in to verandas from the hinged and sliding window series in its vertical parameter.

Option of a motorized projecting opening in roof based installations.

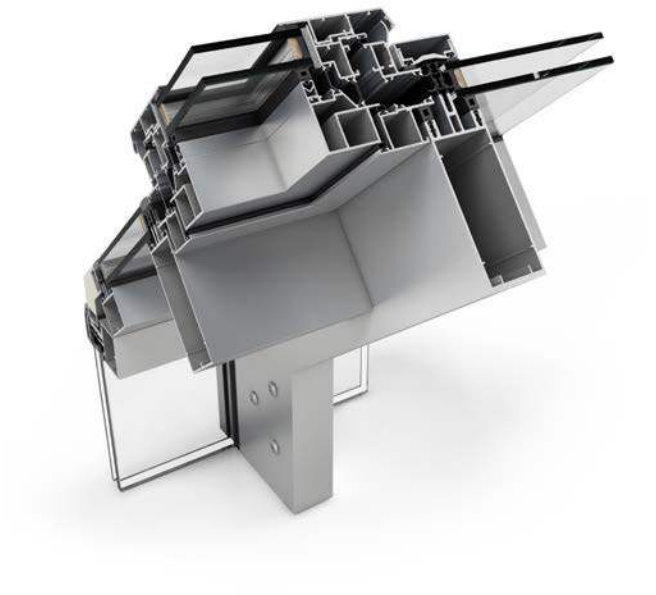

TRANSMITTANCE

U_{cw} from **0.6 (W/m²K)**

Consult dimensions and glass.

GLAZING

FIXED LIGHTS

Maximum: **38 mm**

Minimum: **26 mm**

ROOF WINDOW

Maximum: **38 mm**

Minimum: **24 mm**

Minimum gradient: **Pt = 85% (40º)**

Maximum gradient: **Pt = 12% (7º)**

SECTIONS	Mullion 52 mm Transom 52 mm
PROFILE THICKNESS	Mullion 2.1 & 3.0 mm Transom 2.1 mm

OPENING POSSIBILITIES

Roof based motorized projecting window.

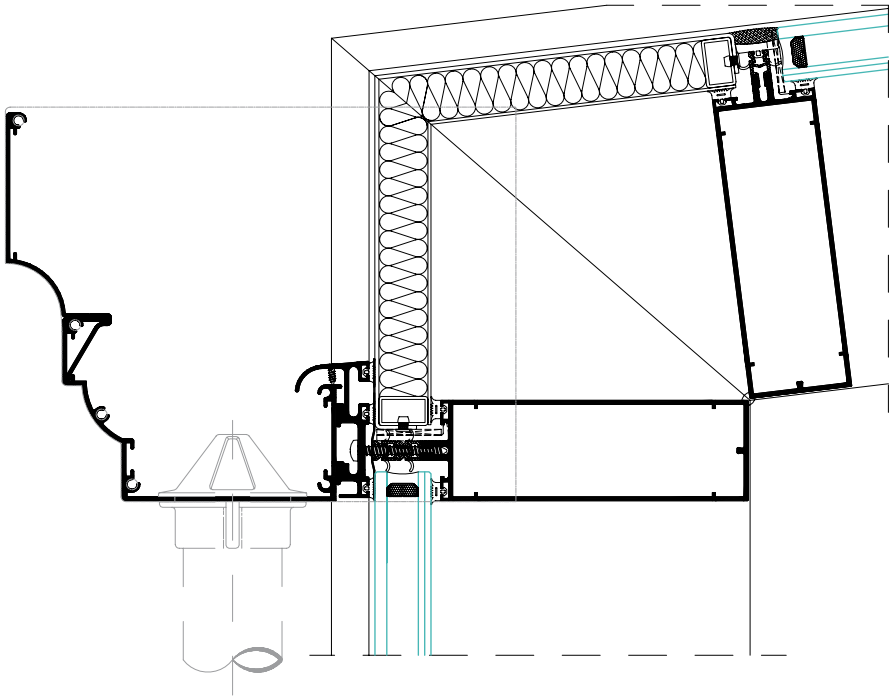

12 / COMPOSITE PANEL

This ventilated façade system is **fabricated directly in the composite panel production centre that CORTIZO has in Spain**. This Factory, with a daily production annual capacity of 5.000.000 m², guarantees the provisioning and immediate supply of this system in the various panel types and finishes.

Furthermore, the latest generation pantograph-fabrication centres found in production and distribution centres throughout Europe, permits the delivery of this constructive solution according to the defined modulation specifications for every project.

There are exclusive Technical Departments for this product that provide personalised assistance that is integral and specific in each architectonic project where CORTIZO Composite Panel is included.

The composite panel also guarantees the response to a hypothetical fire thanks to the option fire retardant (FR) and the non-combustible (A2). It is a 4 mm panel made up of 0.5 mm thick aluminium sheets, coated with PvdF paint with a thickness of 25/35 microns on the external face and central core made of mineral compound and polyethylene whith 3 mm thickness.

This range is completed with the DESIGN + 3 mm thick panel which is ideal for internal applications, signage, digital printing, stands, etc.

» **A efficient, economic, stylish and sustainable construction solution** for re-covering building façades that are made up of 2 aluminium sheets joined by a core of thermoplastic resins.

» A composite panel comprising of an external layer of aluminium alloy triple coated with PvdF paint (polyvinyl kynar 500 70/30 flouride) that offers **great resistance to corrosion and ageing**. Core of thermoplastic resins (polyethelene and mineral compound).

» This material union provides the composite panel with some **excellent mechanical properties: high impact resistance, increased rigidity and reduced weight**. It is a product designed and tested to integrate in to buildings with increased thermal and accoustic features.

PANEL TYPE / CHARACTERISTICS	PE Standard	FR Fire retardant	A2 non-combustible	DESIGN + Interiors
Aluminium thickness	0.5 mm	0.5 mm	0.5 mm	0.3 mm
Panel thickness	4 mm	4 mm	4 mm	3 mm
Panel weight	5.46 Kg/m²	8.02 Kg/m²	8.03 Kg/m²	3.85 Kg/m²
Panel width (Stock)	2000/1250/1500 mm	2000/1250/1500 mm	2000/1250/1500 mm	1500 mm
Panel length (Stock)	4000/5000 mm	4000/5000 mm	4000/5000 mm	3050/5050 mm

TRANSMITTANCE

FR Ust (W/m²K) = **5.62**

For a panel dimensioned at 1.48 x 1.23 m.
Test according to: EN ISO 12412-2:2005

PE Ust (W/m²K) = **3.38**

For a panel dimensioned at 1.48 x 1.23 m.
Test according to: EN ISO 12412-2:2005

GLAZING

RW (C;Ctr) dB: (C;Ctr) = 26 (-1, -3)

For a panel dimensioned at 1.48 x 1.23 m.
Test according to: EN ISO 140-3:1995

FIRE REACTION CLASSIFICATION

FR- B-s1, d0

According to EN 13501-1:2007.

A2- A2-s1, d0

According to EN 13501-1:2007.

FIXING SYSTEMS

Hanging system (CH).
Male-Female system (SZ).
Riveted system.
Glued system .
T-Hanging system (CH).
T-Male-Female system (SZ).
T-Riveted system.
T-Glued system .

FINISHES

Painted in 58 colours in stock:

Silver metallic	Metallic blue	Terracota	Grey white	Corten steel
White	Jade green	Gold metallic	Traffic yellow	Anodic light
Metallic white	Traffic red	Cream nuevo	Brown	Anodic dark
Artic white	Ultramarine Blue	Mouse grey	Orange	Mirror
Grey metallic	White	Signal white	Blood red	Sunset
Similar	Copper metallic	Iron grey	High gloss blue	Golden pearl
Silver metallic	Black	Steel blue	Dusty grey	Stellar blue
Similar	Umbra grey	Anthracite grey	Textured white	Walnut
Champagne	White	Dark grey	Copper brushed	Colonial red
Metallic	Ultramatt black	Yellow green	Intense copper	Sunset teak
Bronze metallic	Natural blue	Ivory	Golden sand	White maple
Titanium Metallic	Light grey	Dark green	Rugged black	
Carbon	Brushed	Deep red	High gloss black	

All other RAL colours available on request.

ALUMINIUM ALLOYS

3005H44 / 3105H44 / 3105H46 / 5005H22

CERTIFICATES

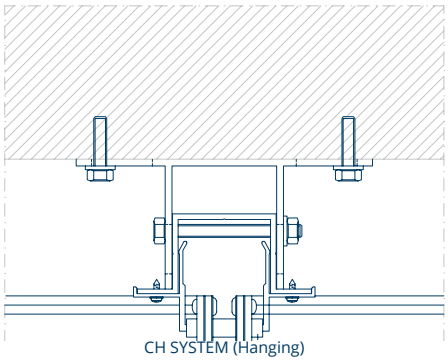

CH SYSTEM (Hanging)

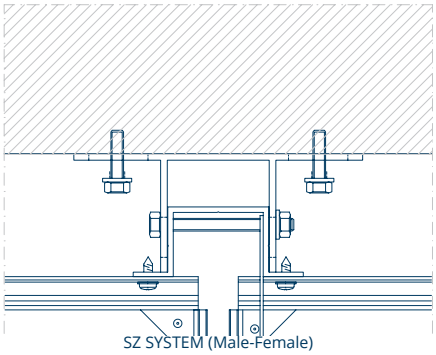

SZ SYSTEM (Male-Female)

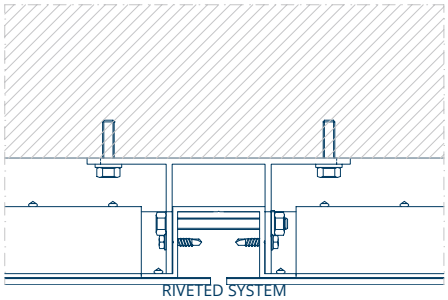

RIVETED SYSTEM

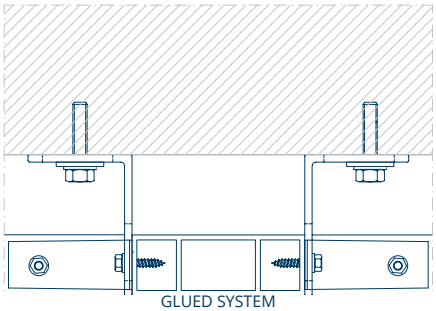

GLUED SYSTEM

F TP 52 TP 52 Façade

F SG 52 SG 52 Façade

F TPH 52 TPH 52 Façade

F TPV 52 TPV 52 Façade

F ST 52 ST 52 Façade

F SST 52 SST 52 Façade

P COMPOSITE Composite Panel

SV SKYLIGHT VERANDA Skylight - Veranda

CORTIZO / FACADES

PROJECTS

PITÁGORAS

SOCIEDAD DE
prevención

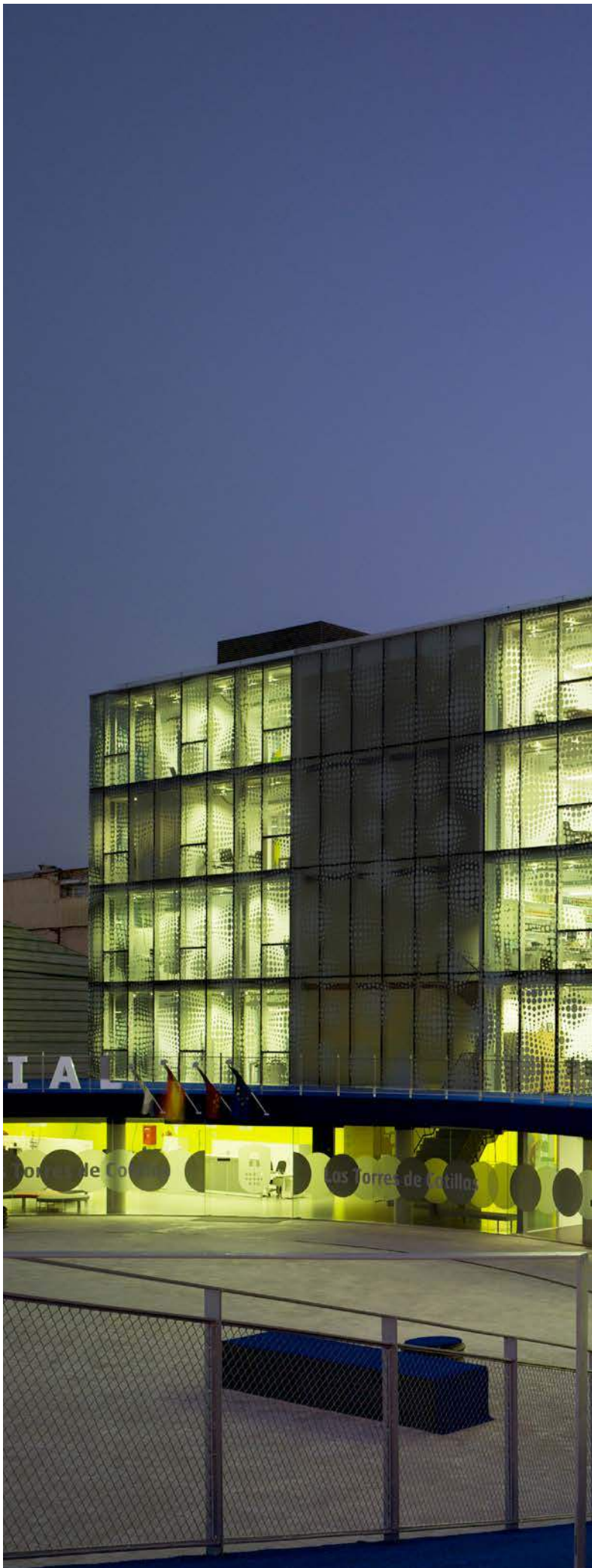

28:89

F SG 52

F ST 52

F TP 52

F SG 52
María Goyri
CENTRO DE BIOTECNOLOGÍA ANIMAL

F TP 52

P COMPOSITE

F TP 52

F TP 52

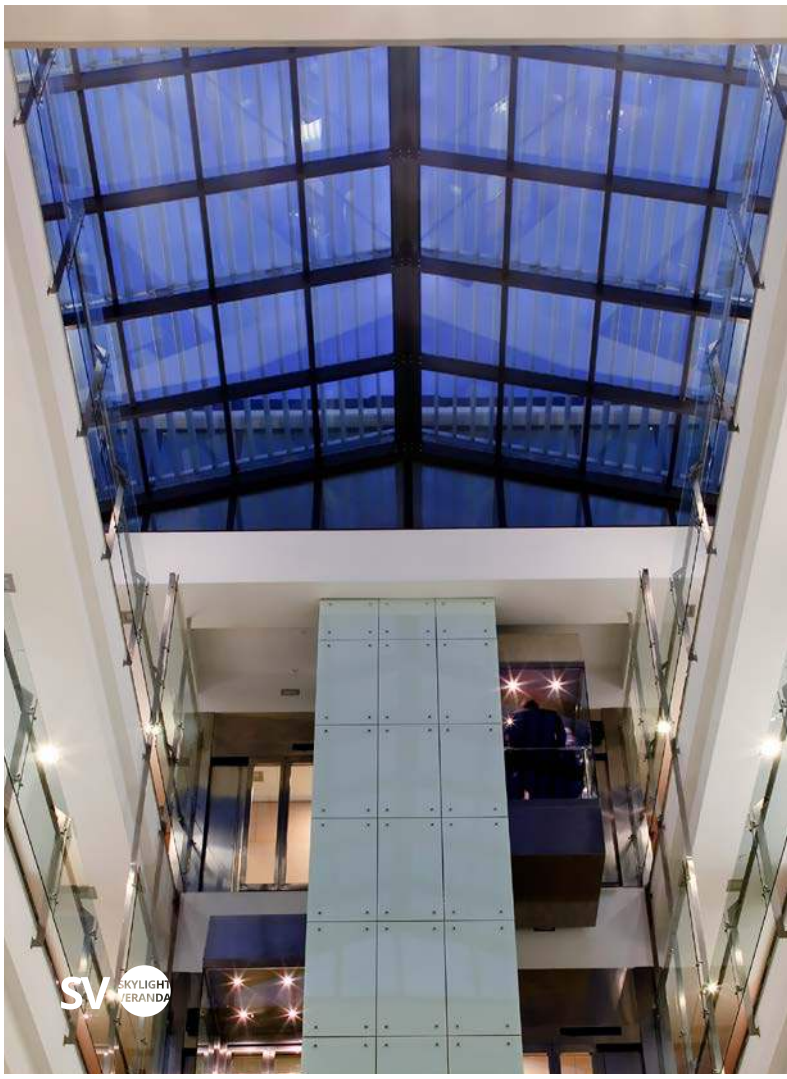
SV
SKYLIGHT
VERANDA

F
ST
52

marineda city
ocio & shopping
"Primero merienda..."
"...después patinaje, minigolf o karting"
marineda city

F ST 52

F TP 52

F TPH 52

F ST 52

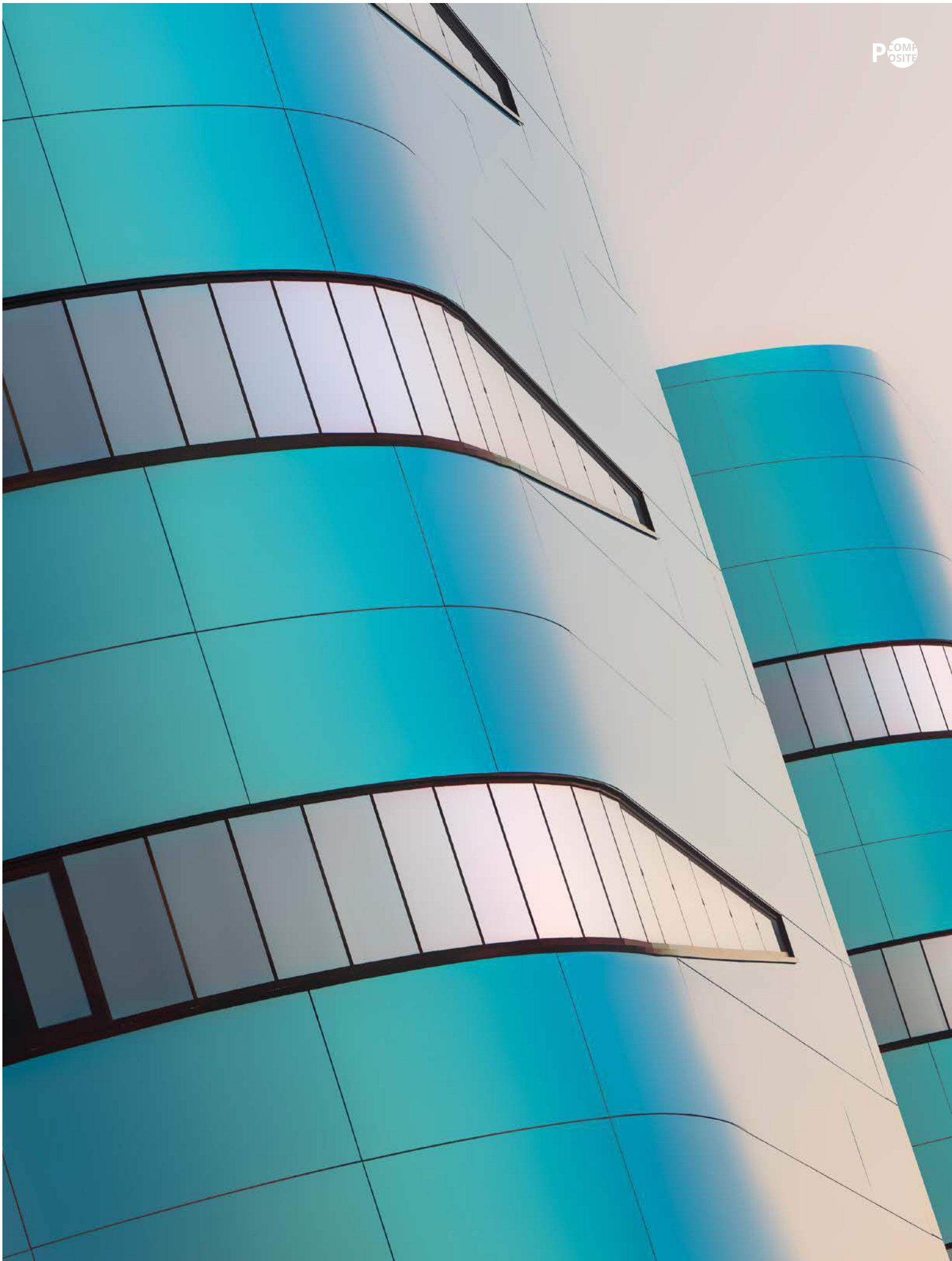

CORTIZO AR
DISCOVER AUGMENTED REALITY

{DOWNLOAD OUR APP}

Available on the App Store

ANDROID APP ON Google play

AVAILABLE FOR SMART PHONE AND TABLET